PDWQNYTPGPGVRYPLTFGW

QUERY	PDWQNYTPGPGVRYPLTFGW
CONSENSUS_A	----------?--------
A.FR.HIV232956	----------T--------
A.FR.HIV232957	----------T-F------
A.FR.HIV232959	----------T-F------
A.KE.Q23-CXC-CG	----------T-F------
A.SE.SE6594	----------I-F------
A.SE.SE7253	----------
A.SE.SE7535	----------I--------
A.SE.SE8131	---H-------I--------
A.SE.SE8538	----------
A.SE.SE8891	----------T-F------
A.UG.92UG037	----------I--------
A.UG.U455	----------I--------
CONSENSUS_B	----------i--------
B.-.E90NEF	----------T--------
B.-.HIV232997	----------I-F---xx-
B.-.HIV233002	---K-------T-----L--
B.-.HIV233009	----------T--------
B.-.HIV233016	----------I--------
B.-.HIV233020	----------I----C---
B.-.HIV233023	----------T---VC---
B.-.HIV233029	----------I--------
B.-.HIV233030	----------T-F------
B.-.HIV233032	----S------T-C--CL--
B.-.HIV233037	----------
B.-.HIV233038	----------T-F------
B.-.HIV233043	----------I--------
B.-.HIV233045	----------I--------
B.-.HIV233046	----------F--CL--
B.AU.1062-1-NEF	----------T--------
B.AU.93JW-3	----------P-F------
B.AU.93LW-3	----------P-F------
B.AU.AF064660	---H-------I--------
B.AU.AF064667	----------P-F------
B.AU.AF064676	----------I----C---
B.AU.MBC200	----------T-W------
B.AU.MBC925	----------I---I----
B.CN.AF033570	----------T-F------
B.CN.AF033572	----------T-F------
B.CN.PRC8	----------T-F------
B.CN.RL42	----------T-F------
B.DE.D31	----------T-F------
B.DE.HAN	----------
B.DE.HEI28CS	----------W------
B.DE.HEI3BL	----------
B.DE.HEI4BL	----------F------
B.DE.HIVU52491	--R-S------T-F------
B.DE.NEFCC	----------T-----L--
B.DE.NEFCG	----------I--------
B.DE.NH53	----------I--------
B.ES.89SP061	----------I--------
B.ES.AF082355	----------I--------
B.ES.AF082357	----------I--------
B.ES.AF082358	----------T-F------
B.ES.AF082359	----------I--------
B.ES.AF082363	----------C---
B.ES.AF082364	----------I-----L--
B.ES.AF082366	-------..--I--------
B.ES.AF082368	----------T-F------
B.ES.AF082370	-------..--T-F------
B.ES.AF082375	----------I--------
B.ES.AF082376	----------T--------
B.ES.AF082377	----------I--------
B.ES.AF082378	----------I--------
B.ES.AF082380	----------T-F------
B.ES.AF082383	----------
B.ES.AF082386	----G--..----F------
B.FR.HIV232961	----------F------
B.FR.HIV232962	----------I--------
B.FR.HIV232963	----------T-F------
B.FR.HIV232964	----------T-F------
B.FR.HIV232965	---H-------T----C---
B.FR.HXB2	--$----------
B.FR.NE100	----------I-W---L--
B.FR.SWB884	----------I-W---P--
B.GA.OYI	----------I----C---
B.GB.001GH-93(1)	----------I--------
B.GB.002EM-93(1)	----------H------
B.GB.003PW-93(1)	----------
B.GB.005PF1-93(1)	----------I-F---S--
B.GB.006DC-93(1)	----------
B.GB.010JW-93(1)	----------T-F------
B.GB.011JR-93(4)	--------R----F------
B.GB.012WM-93(1)	----------I--------
B.GB.013PP-94(2)	-------K---T-F---Y--
B.GB.016GB-93(1)	----K------TT-------
B.GB.023PA-93(1)	----------
B.GB.025JN-93(1)	----------
B.GB.027SL-93(1)	---H-------I--------
B.GB.028JH-94(1)	----------I--------
B.GB.030JG-93(1)	----------I--------
B.GB.031DA-93(1)	----------I--------
B.GB.032AN-93(1)	----------W------
B.GB.037BS-94(2)	----------
B.GB.039NM-94(1)	----------T--------
B.GB.044C1-94(2)	----------I--------
B.GB.046JM-94(1)	----------I--------
B.GB.048AD-94(1)	----------T--------
B.GB.056RP-94B(1)	----------I--------
B.GB.057DR-94(1)	----------I--------
B.GB.065RK-94(1)	----------T-F------
B.GB.067MM-94(2)	----------
B.GB.068JB-94(1)	----G----------
B.GB.098MS-94(1)	----------I-----Y--
B.GB.103CD-94(1)	----------I--------
B.GB.104RT-94(1)	----------I--------
B.GB.105AS-94(1)	----------T--------
B.GB.112CR-94(2)	----------I--------
B.GB.117CH-94(2)	----------I--------
B.GB.122PS-95(1)	----------F------
B.GB.124PD-95(1)	----------T-F-I----
B.GB.127RG-96(1)	----------L--
B.GB.130WDC-95(1)	------A----T-F--C---
B.GB.131MVS-95(1)	----------T--------
B.GB.143PL-95(1)	-------K---I--------
B.GB.151DH-95(1)	----------I----
B.GB.157GT-95(1)	----------T--------
B.GB.160KO-95(1)	----------I-----L--
B.GB.161KC-95(1)	----------I--------
B.GB.162BB-95(1)	--------R--TKF------
B.GB.163NG-95(1)	----------T-F------
B.GB.164SZ-95(1)	----------
B.GB.165DH-95(1)	----------
B.GB.166PW-95(1)	----------I--------
B.GB.167RW-95(1)	----------R-
B.GB.168MB-95(1)	----------
B.GB.CAM1	----------I--------
B.GB.GLNEF1	--$----------
B.GB.MANC	-------R---I----A---
B.GB.NEF2	----------
B.GB.NEF3	-------S-----F------
B.GB.NEF5	----KD----------
B.IN.HIVP35A	----------I--------
B.IT.AF011471	----------I--------
B.IT.AF011474	----------
B.IT.AF011477	----------I--------
B.IT.AF011478	----------I--------
B.IT.AF011480	----------
B.IT.AF011482	-------S---I--------
B.IT.AF011483	----------T-F------
B.IT.AF011486	----C------I-----Y--
B.IT.AF011488	----------T-----YE-
B.IT.AF011492	----------C---
B.IT.AF047080	----------I--------
B.IT.AF047081	----------I--------
B.IT.B.IT-L1	----------x-x------
B.IT.B.IT-L2	----------T--------
B.IT.B.IT-L3	----x--S---I---x-L--
B.IT.B.IT-L4	----------T-----Y--
B.IT.B.IT-L5	----------T--------
B.IT.B.IT-R1	-Nx--------P-F------
B.IT.B.IT-R2	----------T-F------
B.IT.B.IT-R3	----------I--------
B.IT.B.IT-R4	----------I--------
B.IT.B.IT-R5	----------T--------
B.KR.AF063915	----------I--------
B.KR.AF063916	----M--------F------
B.KR.AF063919	----------T--------
B.KR.AF063921	----------#-
B.KR.AF063926	----------I--------
B.KR.AF063927	----------T-F------
B.KR.AF063931	----------L------
B.KR.HIVZ98019	----------T-F------
B.KR.HIVZ98022	----------I--------
B.KR.HIVZ98024	----------F------
B.KR.HIVZ98025	----G------I--------
B.KR.HIVZ98027	----------I--------
B.KR.HIVZ98029	----------T-F------
B.KR.HIVZ98030	----------T-F------

```
B.KR.HIVZ98032        -----------I--------
B.KR.HIVZ98034        -------Q---T-F------
B.NL.3202A21          -----------I--------
B.NL.NEFA             ---H-------P-F------
B.NL.NEFD             -----------T-F------
B.NL.NEFE             -----------T--------
B.SE.AF047082         -----------T-F------
B.SE.AF047083         -----------T--------
B.SE.AF047085         -----------T-F------
B.TH.28-19            --------------------
B.TH.AF082838         -----------T--------
B.TH.AF082839         ---H-------I--------
B.TH.AF082841         -----------I--------
B.TW.LM49             --------------------
B.US.HIV1U03375       -----------I--------
B.US.005PF-96(1)      -----------I-F------
B.US.AD-93(1)         -E---------I--------
B.US.AD8              --------------------
B.US.BC               -----------I--------
B.US.BIB              --------------------
B.US.BJ-93(1)         -------K---T-F------
B.US.BO1              --------------------
B.US.BRVA             --------------------
B.US.BT-94(1)         -------Q---T-F------
B.US.CD1              -----------I--------
B.US.D8511            -----------T--------
B.US.DH1              --------R-RTGF--C-R-
B.US.DH123            -----------I--------
B.US.DJ-93(1)         -----------I----C---
B.US.E1               ----C------I--------
B.US.E81NEF           -----------I--------
B.US.E88NEF           -----------T--------
B.US.EP-94(1)         ---D-------T----C---
B.US.FA-93(1)         --------------------
B.US.HIV1U16893       -----------T-F--C---
B.US.HIV1U24455       -----------I--------
B.US.HIV1U26074       -----------T-W------
B.US.HIV1U26098       -----------I--------
B.US.HIV1U26112       -----------I--------
B.US.HIV1U26119       -----------I--------
B.US.HIV1U26141       ---S-------I--------
B.US.HIVU44444        -----------T--------
B.US.HIVU44450        -----------I--------
B.US.HIVU44456        --------R--I--------
B.US.HIVU44465        ----------------C---
B.US.HIVU44468        -----------A-F------
B.US.HP87B1           -----------------L--
B.US.HS-93(1)         -----------T--------
B.US.JRCSF            -------A-----F------
B.US.JRFL             -----------I-F------
B.US.LM1              -----------T--------
B.US.LT-87-1(1)       ---H----------------
B.US.MB-94(1)         ----------------C---
B.US.MNCG             -----------I--------
B.US.NC7              -----------I--------
B.US.NEF              --------------------
B.US.NEF164B          -----------I--------
B.US.NEF166E          -----------I--------
B.US.NEF179C          --------------------
B.US.NEF226B          -----------I--------
B.US.P102A13          -----------I--------
B.US.P233A17          -----------I--------
B.US.P248A01          -----------I--------
B.US.P357A01          -----------I--------
B.US.P896             -----------I--------
B.US.PC-93(1)         -----------T-----L--
B.US.PRISO(1)         --------------------
B.US.RF               -----------T--------
B.US.RP12             -----------T-F------
B.US.RR1              -----------I--------
B.US.SC               -----------I----C---
B.US.SF2              -----------I--------
B.US.U16917           -----------I--------
B.US.WEAU160          -----------T----C---
B.US.WR27             -----------T--------
B.US.YU2              ---------.-T-W------

CONSENSUS_C           --------------------
C.BR.92BR025          -------------F------
C.BW.96BW01B21        --------------------
C.BW.96BW0402         --------------------
C.BW.96BW0502         ------------K-------
C.BW.96BW1104         ---H----------------
C.BW.96BW1210         ----C---------------
C.BW.96BW15B03        ---H----------------
C.BW.96BW16B01        ---------------V----
C.BW.96BW17A09        --------------------
C.ET.ETH2220          --------------------
C.FR.HIV232966        --------------------
C.FR.HIV232967        -----------T--------
C.FR.HIV232968        --------------------
C.FR.HIV232969        -------S------------
C.FR.HIV232970        ----C--------F------
C.FR.HIV232971        --------------------
C.FR.HIV232972        --------------------
C.FR.HIV232973        -------------L------
C.FR.HIV232976        --------------------
C.FR.HIV232977        ----C--------F------
C.FR.HIV232978        --------------------
C.FR.HIV232979        --------------------
C.FR.HIV232980        --------------------
C.FR.HIV232996        -------------H-I----
C.IN.21068            -------------F------
C.IN.301904           --------------------
C.IN.301999           -------------F------
C.IN.94IN11246        -----------T-F------
C.IN.HIVY15117        -------------F------
C.IN.HIVY17884        -----------T-F------
C.IN.HIVY17891        --------------------
C.IN.HIVY17892        -----------T-F------

CONSENSUS_D           -----------I--------
D.CD.84ZR085          -----------I--------
D.CD.ELI              -----------I--------
D.CD.NDK              -----------I--------
D.UG.94UG1141         -----------I--------

CONSENSUS_F           -----------i-f------
F.CM.HIV232985        -----------I-----L--
F.CM.HIV232986        -----------P-F------
F.FR.HIV232987        -----------I-F------

CONSENSUS_F1          -----------i--------
F1.BE.VI850           -----------I-----L--
F1.BR.93BR020.1       -----------I-----M--
F1.FI.FIN9363         --------------------
F1.FR.MP411           -----------I-F------

CONSENSUS_F2          -----------?-?---?--
F2.CM.MP255           -----------I-----L--
F2.CM.MP257           -----------P-F------

CONSENSUS_G           -----------t-f------
G.BE.DRCBL            -----------T-V------
G.FI.HH8793           -----------T-F------
G.ML.HIV232990        -----------T-F------
G.NG.92NG083          -----------T-L------
G.NG.HIV232991        -E---------I-F------
G.NG.HIV232992        -----------I-F------
G.SE.SE6165           -----------T-F------

CONSENSUS_H           -----------e--------
H.BE.VI991            ---H-------E--------
H.BE.VI997            -----------EG-------
H.CD.HIV232994        --------------------
H.CD.HIV232995        ----K---------------
H.CF.90CF056          -----------E-F------

CONSENSUS_J           -----------??-------
J.SE.SE9173           -----------Tx-------
J.SE.SE9280           -----------I--------

CONSENSUS_K           -----------I--------
K.CD.EQTB11C          -----------I--------
K.CM.MP535            -----------I--------
N.CM.YBF30            ---H-------I---V----

CONSENSUS_O           ----?------?-F------
O.CM.ANT70C           -----------T-F------
O.CM.MVP5180          ----C------P-F------
CRF01_AE.CF.90CF402   ----------------C---
CRF01_AE.FR.232982    -----------I----C---
CRF01_AE.FR.232983    ---H-------I-F--C---
CRF01_AE.FR.232984    -----------I----C---
CRF01_AE.TH.1-2       -----------I----C---
CRF01_AE.TH.1-3       -----------I----C---
CRF01_AE.TH.11-25     ---H-------I-F--C---
CRF01_AE.TH.11-31     ---H-------I-F--C---
CRF01_AE.TH.122-21    ---H---S---I----C---
CRF01_AE.TH.18-47     -----------I----C---
CRF01_AE.TH.235-3     -----------I----C---
CRF01_AE.TH.235-32    -----------I----C---
CRF01_AE.TH.24-54     ---H-------I----C---
CRF01_AE.TH.240-12    -----------I-F--C---
```

```
CRF01_AE.TH.26-3      ---H-------I----C---
CRF01_AE.TH.35-6      ---H-------I----C---
CRF01_AE.TH.6-9       -----------I-F--C---
CRF01_AE.TH.73-44     ----------------C---
CRF01_AE.TH.74-26     -----------I----C---
CRF01_AE.TH.89-30     -----------I----C---
CRF01_AE.TH.9-3       ---DD------I----C---
CRF01_AE.TH.93TH253   ---H-------I----C---
CRF01_AE.TH.98-4      ---H-------I----C---
CRF01_AE.TH.CM240     -----------I-F--C---
CRF01_AE.TH.TH022     -------------L--C---
CRF01_AE.TH.TH047     -----------I-F--C---
CRF02_AG.FR.DJ263     -----------T--------
CRF02_AG.FR.DJ264     -----------T--------
CRF02_AG.NG.IBNG      -----------T-F------
CRF03_AB.RU.KAL1532   ----.......--I-F------
CRF04_cpx.CY.94CY03   ---D-------E-F--C---
CRF04_cpx.GR.97PVCH   -----------E-F--C---
CRF04_cpx.GR.97PVMY   -----------T-F--C---
AC.IN.21301           ---H----------------
AC.RW.92RW009         --------------------
AC.SE.SE9488          -----------I--------
AC.ZM.ZAM184          -----------T-F------
ACD.SE.SE8603         -----------T--------
AD.SE.SE6954          -----------I----I---
AD.SE.SE7108          ----C------T-F------
ADHU.NO.NOGIL3        -----------E-F------
ADU.CD.MAL            -----------I-F------
AF.GA.HIV232981       -----------I-----S--
AG.NG.G3              -----------T-F----R-
AG.SE.SE7812          -----------T-F------
AGHU.GA.VI354         -----------I----C---
AGJ.AU.BFP90          -----------T-F------
AGJ.ML.95ML84         -----------I--------
AGU.CD.Z321           ---H-------T----C---
BF.BR.93BR029.4       -----------T-----L--
DF.BE.VI961           -----------T--------
GH.GA.HIV232993       ----C---------------
GU.FR.HIV232974       ---H-------T-F------
U.CD.VI1126           ---H-------I----C---
U.CM.HIV232988        -----------I--------
U.FR.HIV232958        -----------I----C---
U.FR.HIV232960        -----------I----C---

CONSENSUS_CPZ         -------?---?-?--??--
CPZ.GA.CPZGAB         -------T---T-F--C---
CPZ.US.CPZUS          -----------------Y--
```

GVRYPLTFGWCYKLVPVEPD

```
QUERY                GVRYPLTFGWCYKLVPVEPD

CONSENSUS_A          -?---------f-----d--
A.FR.HIV232956       -T---------F-----D-V
A.FR.HIV232957       -T-F-------F-----D-S
A.FR.HIV232959       -T-F-------F-----D-A
A.KE.Q23-CXC-CG      -T-F-------F-----D--
A.SE.SE6594          -I-F-------F-----D--
A.SE.SE7253          -----------F-----D--
A.SE.SE7535          -I---------F-----D--
A.SE.SE8131          -I---------F-----D--
A.SE.SE8538          -----------F-------E
A.SE.SE8891          -T-F-------F-----D--
A.UG.92UG037         -I---------F-----DE-
A.UG.U455            -I---------------D-A

CONSENSUS_B          -i---------f-------e
B.-.E90NEF           -T---------F-------E
B.-.HIV232997        -I-F---xx--F-----PAE
B.-.HIV233002        -T-----L---F-------E
B.-.HIV233009        -T---------FR------E
B.-.HIV233016        -I---------F-------E
B.-.HIV233020        -I----C----F-----S-E
B.-.HIV233023        -T---VC----F-------E
B.-.HIV233029        -I---------F-------E
B.-.HIV233030        -T-F-------F-------E
B.-.HIV233032        -T-C--CL---F-------E
B.-.HIV233037        ------------R------E
B.-.HIV233038        -T-F-------F-------E
B.-.HIV233043        -I---------F-------E
B.-.HIV233045        -I---------F------AE
B.-.HIV233046        ---F--CL---F-----S-E
B.AU.1062-1-NEF      -T---------F-------G
B.AU.93JW-3          -P-F-------F-----D-E
B.AU.93LW-3          -P-F-------F-----D-E
B.AU.AF064660        -I---------F-------E
B.AU.AF064667        -P-F-------F--------
B.AU.AF064676        -I----C----F-------E
B.AU.MBC200          -T-W-------F-------E
B.AU.MBC925          -I---I-----F-------E
B.CN.AF033570        -T-F-------F-----D-K
B.CN.AF033572        -T-F-------F-----D-K
B.CN.PRC8            -T-F-------F-----D-E
B.CN.RL42            -T-F-------F-----D-E
B.DE.D31             -T-F-------F-----K-E
B.DE.HAN             -----------F--------
B.DE.HEI28CS         ---W-------F------xE
B.DE.HEI3BL          -----------F-------x
B.DE.HEI4BL          ---F-------F-----x-E
B.DE.HIVU52491       -T-F-------F-----D-E
B.DE.NEFCC           -T-----L---F--------
B.DE.NEFCG           -I---------F-----D-E
B.DE.NH53            -I---------F-----G--
B.ES.89SP061         -I---------F-------E
B.ES.AF082355        -I---------F------RE
B.ES.AF082357        -I---------F-----D-E
B.ES.AF082358        -T-F-------F-----D--
B.ES.AF082359        -I--------------L-QE
B.ES.AF082363        ------C----F-------G
B.ES.AF082364        -I-----L---F-----D-E
B.ES.AF082366        -I---------F-----D-G
B.ES.AF082368        -T-F-------F--------
B.ES.AF082370        -T-F-------F-------E
B.ES.AF082375        -I---------F-----D--
B.ES.AF082376        -T---------F-----D--
B.ES.AF082377        -I---------F-----D-E
B.ES.AF082378        -I---------F-----D-E
B.ES.AF082380        -T-F-------F-----K-E
B.ES.AF082383        -----------F-----D-E
B.ES.AF082386        ---F-------F--------
B.FR.HIV232961       ---F-------F-----K-N
B.FR.HIV232962       -I---------F------QE
B.FR.HIV232963       -T-F-------F-----D--
B.FR.HIV232964       -T-F-------F-------E
B.FR.HIV232965       -T----C----F-----D--
B.FR.HXB2            --------------------
B.FR.NE100           -I-W---L---F-------E
B.FR.SWB884          -I-W---P---F-------E
B.GA.OYI             -I----C----F----MD--
B.GB.001GH-93(1)     -I---------F-------E
B.GB.002EM-93(1)     ---H-------F-----DQE
B.GB.003PW-93(1)     -----------F------TE
B.GB.005PF1-93(1)    -I-F---S---F-------E
B.GB.006DC-93(1)     -----------F-----D-A
B.GB.010JW-93(1)     -T-F-------F-------E
B.GB.011JR-93(4)     ---F-------F-------E
B.GB.012WM-93(1)     -I---------F----M---
B.GB.013PP-94(2)     -T-F---Y---F--------
B.GB.016GB-93(1)     -TT--------F-------E
B.GB.023PA-93(1)     -----------F------SE
B.GB.025JN-93(1)     -----------F-------E
B.GB.027SL-93(1)     -I---------F-------E
B.GB.028JH-94(1)     -I---------F--------
B.GB.030JG-93(1)     -I---------F-------E
B.GB.031DA-93(1)     -I---------F-------E
B.GB.032AN-93(1)     ---W-------F-------E
B.GB.037BS-94(2)     -----------F-----D-E
B.GB.039NM-94(1)     -T---------F-------E
B.GB.044C1-94(2)     -I---------F--------
B.GB.046JM-94(1)     -I---------F--------
B.GB.048AD-94(1)     -T---------F-------E
B.GB.056RP-94B(1)    -I---------F-----D-E
B.GB.057DR-94(1)     -I---------F------SE
B.GB.065RK-94(1)     -T-F-------F-----D--
B.GB.067MM-94(2)     -----------F-------E
B.GB.068JB-94(1)     -----------F-------E
B.GB.098MS-94(1)     -I-----Y---F-------E
B.GB.103CD-94(1)     -I---------F--------
B.GB.104RT-94(1)     -I---------F-------E
B.GB.105AS-94(1)     -T---------F--------
B.GB.112CR-94(2)     -I---------F-----D--
B.GB.117CH-94(2)     -I---------F--------
B.GB.122PS-95(1)     ---F-------F-----D-E
B.GB.124PD-95(1)     -T-F-I-----F-------E
B.GB.127RG-96(1)     -------L-----------E
B.GB.130WDC-95(1)    -T-F--C----F-------E
B.GB.131MVS-95(1)    -T---------F----LD--
B.GB.143PL-95(1)     -I-----------------E
B.GB.151DH-95(1)     -----I-----F-------E
B.GB.157GT-95(1)     -T---------F-----D-E
B.GB.160KO-95(1)     -I-----L---F-----D--
B.GB.161KC-95(1)     -I---------F-------G
B.GB.162BB-95(1)     -TKF-------F-------E
B.GB.163NG-95(1)     -T-F-------F-----D-E
B.GB.164SZ-95(1)     -----------F-----D--
B.GB.165DH-95(1)     -----------F-------E
B.GB.166PW-95(1)     -I---------F----M---
B.GB.167RW-95(1)     --------R--F-------E
B.GB.168MB-95(1)     -----------F-------E
B.GB.CAM1            -I---------F-------E
B.GB.GLNEF1          --------------------
B.GB.MANC            -I----A----F-----D-E
B.GB.NEF2            -----------F-------G
B.GB.NEF3            ---F-------F--------
B.GB.NEF5            -----------F-------E
B.IN.HIVP35A         -I---------F-----D-E
B.IT.AF011471        -I-----------------E
B.IT.AF011474        -----------F-------E
B.IT.AF011477        -I---------F-------E
B.IT.AF011478        -I---------F-------E
B.IT.AF011480        --------------------
B.IT.AF011482        -I---------F-----N-E
B.IT.AF011483        -T-F-------F--------
B.IT.AF011486        -I-----Y---F--------
B.IT.AF011488        -T-----YE--F-------E
B.IT.AF011492        ------C----F------xx
B.IT.AF047080        -I---------F-------E
B.IT.AF047081        -I---------F-------E
B.IT.B.IT-L1         -x-x-------F-----D--
B.IT.B.IT-L2         -T---------F-----D-E
B.IT.B.IT-L3         -I---x-L---F-------E
B.IT.B.IT-L4         -T-----Y---F------TE
B.IT.B.IT-L5         -T---------F-------E
B.IT.B.IT-R1         -P-F------WC----L-KE
B.IT.B.IT-R2         -T-F-------F------QE
B.IT.B.IT-R3         -I--------SF-----D--
B.IT.B.IT-R4         -I---------F-------E
B.IT.B.IT-R5         -T---------F--E----E
B.KR.AF063915        -I---------F-------E
B.KR.AF063916        ---F-------F-------E
B.KR.AF063919        -T---------F-------E
B.KR.AF063921        --------#--F-------E
B.KR.AF063926        -I---------F-------E
B.KR.AF063927        -T-F-------F-------E
B.KR.AF063931        ---L-------FL------E
B.KR.HIVZ98019       -T-F-------F-------E
B.KR.HIVZ98022       -I---------F-----D-E
B.KR.HIVZ98024       ---F-------F-------E
B.KR.HIVZ98025       -I---------F------KE
B.KR.HIVZ98027       -I---------F--------
B.KR.HIVZ98029       -T-F-------F-----D--
B.KR.HIVZ98030       -T-F-------F-------E
```

```
B.KR.HIVZ98032        -I---------L-------E
B.KR.HIVZ98034        -T-F-------F-------E
B.NL.3202A21          -I---------F------QE
B.NL.NEFA             -P-F-------F-------E
B.NL.NEFD             -T-F-------F--------
B.NL.NEFE             -T---------L-------E
B.SE.AF047082         -T-F-------F-----D-V
B.SE.AF047083         -T---------F------KE
B.SE.AF047085         -T-F-------F-------E
B.TH.28-19            -----------F-------E
B.TH.AF082838         -T---------F-------E
B.TH.AF082839         -I---------F-------E
B.TH.AF082841         -I---------F-I--ID--
B.TW.LM49             -----------F-------E
B.US.HIV1U03375       -I---------F-----DQ-
B.US.005PF-96(1)      -I-F-------F------QE
B.US.AD-93(1)         -I---------F-------E
B.US.AD8              -----------F-------E
B.US.BC               -I---------F-----D-E
B.US.BIB              -----------F-------E
B.US.BJ-93(1)         -T-F-------F-------E
B.US.BO1              -----------F-------E
B.US.BRVA             -----------F-------E
B.US.BT-94(1)         -T-F-------F----M--E
B.US.CD1              -I---------F-------E
B.US.D8511            -T---------F-------E
B.US.DH1              RTGF--C-R--F-----D--
B.US.DH123            -I---------F-----D-E
B.US.DJ-93(1)         -I----C----F--------
B.US.E1               -I---------F-------E
B.US.E81NEF           -I---------F-------E
B.US.E88NEF           -T---------F-------E
B.US.EP-94(1)         -T----C----F-----D--
B.US.FA-93(1)         -----------F-----D-E
B.US.HIV1U16893       -T-F--C----F-----D--
B.US.HIV1U24455       -I---------F-------E
B.US.HIV1U26074       -T-W-------F-------E
B.US.HIV1U26098       -I---------F------KE
B.US.HIV1U26112       -I---------F-------E
B.US.HIV1U26119       -I---------F-------E
B.US.HIV1U26141       -I---------F-------Q
B.US.HIVU44444        -T---------F-------E
B.US.HIVU44450        -I---------F------QE
B.US.HIVU44456        -I---------F-------.
B.US.HIVU44465        ------C----F-----D-E
B.US.HIVU44468        -A-F-------F-----D--
B.US.HP87B1           -------L---F-----D-E
B.US.HS-93(1)         -T--------RF-------E
B.US.JRCSF            ---F-------F-----D-E
B.US.JRFL             -I-F-------F-------E
B.US.LM1              -T---------F----I--E
B.US.LT-87-1(1)       -----------F--A--D--
B.US.MB-94(1)         ------C----F-------E
B.US.MNCG             -I---------F-------E
B.US.NC7              -I---------F--------
B.US.NEF              --------------------
B.US.NEF164B          -I---------------DQE
B.US.NEF166E          -I---------F-------E
B.US.NEF179C          -----------F-----D--
B.US.NEF226B          -I---------F-------E
B.US.P102A13          -I---------F-------E
B.US.P233A17          -I---------F-------E
B.US.P248A01          -I---------F--------
B.US.P357A01          -I--------RF-----D--
B.US.P896             -I------------------
B.US.PC-93(1)         -T-----L---F------TE
B.US.PRISO(1)         -----------F----A--G
B.US.RF               -T---------F--------
B.US.RP12             -T-F-------F------QE
B.US.RR1              -I---------F-------E
B.US.SC               -I----C----F-----K-E
B.US.SF2              -I---------F-------E
B.US.U16917           -I---------F-----D-E
B.US.WEAU160          -T----C----F-------E
B.US.WR27             -T---------F----L---
B.US.YU2              -T-W-------F-------E

CONSENSUS_C           -----------f-----D-r
C.BR.92BR025          ---F-------F-----D-R
C.BW.96BW01B21        -----------F-----D-R
C.BW.96BW0402         -----------------D-K
C.BW.96BW0502         --K--------F-----D-G
C.BW.96BW1104         -----------F-----D-G
C.BW.96BW1210         -----------F-----D-G
C.BW.96BW15B03        -----------------D-R
C.BW.96BW16B01        -----V-----F-----D-R
C.BW.96BW17A09        -----------------D-R
C.ET.ETH2220          -----------F-----D-S
C.FR.HIV232966        -----------F-----D-K
C.FR.HIV232967        -T---------F-----D-G
C.FR.HIV232968        -----------F-----D-G
C.FR.HIV232969        -----------F-----D-S
C.FR.HIV232970        ---F-------F-----D-R
C.FR.HIV232971        ----------PF-----D-R
C.FR.HIV232972        ----------PF-----D-R
C.FR.HIV232973        ---L-------F-----D-R
C.FR.HIV232976        -----------F-----D-E
C.FR.HIV232977        ---F-------F-----D-G
C.FR.HIV232978        -----------V--L--D-R
C.FR.HIV232979        ----------LF-----D-S
C.FR.HIV232980        -----------------D-R
C.FR.HIV232996        ---H-I----LF-----D-K
C.IN.21068            ---F-------F-----D-R
C.IN.301904           -----------F-----D-R
C.IN.301999           ---F-------F-----D-R
C.IN.94IN11246        -T-F-------F-----D-R
C.IN.HIVY15117        ---F-------F-----D-K
C.IN.HIVY17884        -T-F-------F-----D-R
C.IN.HIVY17891        -----------F-----D-R
C.IN.HIVY17892        -T-F-------F-----D-R

CONSENSUS_D           -I---------fe----d-q
D.CD.84ZR085          -I---------FE----D-E
D.CD.ELI              -I----------E----D-Q
D.CD.NDK              -I---------FQ----D-Q
D.UG.94UG1141         -I---------FE---M--K

CONSENSUS_F           -i-f-------F-----D-e
F.CM.HIV232985        -I-----L---F-----D-E
F.CM.HIV232986        -P-F-------F-----D-E
F.FR.HIV232987        -I-F-------F-----D--

CONSENSUS_F1          -i---------F-----d-e
F1.BE.VI850           -I-----L---F-----D-E
F1.BR.93BR020.1       -I-----M---F-----D-E
F1.FI.FIN9363         -----------F-------E
F1.FR.MP411           -I-F-------F-----D--

CONSENSUS_F2          -?-?---?---F-----D-E
F2.CM.MP255           -I-----L---F-----D-E
F2.CM.MP257           -P-F-------F-----D-E

CONSENSUS_G           -t-f-------F----md-a
G.BE.DRCBL            -T-V-------F----M--S
G.FI.HH8793           -T-F-------F--E--D-A
G.ML.HIV232990        -T-F-------F----MD-A
G.NG.92NG083          -T-L-------F----MD-A
G.NG.HIV232991        -I-F-------F----LD-T
G.NG.HIV232992        -I-F-------F----MD-A
G.SE.SE6165           -T-F-------F----MD-A

CONSENSUS_H           -e---------F-----d-q
H.BE.VI991            -E---------F-----D-Q
H.BE.VI997            -EG--------F--I--D-Q
H.CD.HIV232994        -----------F-----D-Q
H.CD.HIV232995        -----------F-----D-L
H.CF.90CF056          -E-F-------F-----N-Q

CONSENSUS_J           -??--------?-----D-S
J.SE.SE9173           -Tx--------F-----D-S
J.SE.SE9280           -I---------------D-S

CONSENSUS_K           -I---------------D-?
K.CD.EQTB11C          -I---------------D-R
K.CM.MP535            -I---------------D-A
N.CM.YBF30            -I---V-----F----LSAE

CONSENSUS_O           -?-F------LF-----S?E
O.CM.ANT70C           -T-F------LF-----SEE
O.CM.MVP5180          -P-F------LF-----SAE
CRF01_AE.CF.90CF402   ------C----F-----D-R
CRF01_AE.FR.232982    -I----C----F-----DTG
CRF01_AE.FR.232983    -I-F--C----F-----D-R
CRF01_AE.FR.232984    -I----C----F-----D-G
CRF01_AE.TH.1-2       -I----C----F-----D-R
CRF01_AE.TH.1-3       -I----C----F-----D-R
CRF01_AE.TH.11-25     -I-F--C----F-----D-K
CRF01_AE.TH.11-31     -I-F--C----F-----D-G
CRF01_AE.TH.122-21    -I----C----F-----D-R
CRF01_AE.TH.18-47     -I----C----F-----D-R
CRF01_AE.TH.235-3     -I----C----F-----D-R
CRF01_AE.TH.235-32    -I----C----F-----D-R
CRF01_AE.TH.24-54     -I----C----F-----D-R
CRF01_AE.TH.240-12    -I-F--C----F-----DQR
```

```
CRF01_AE.TH.26-3      -I----C----F-----D-R
CRF01_AE.TH.35-6      -I----C----F-----DSR
CRF01_AE.TH.6-9       -I-F--C----F-----D-R
CRF01_AE.TH.73-44     ------C----F-----D-R
CRF01_AE.TH.74-26     -I----C----F-----DSG
CRF01_AE.TH.89-30     -I----C----F-----D-R
CRF01_AE.TH.9-3       -I----C----F-----D-R
CRF01_AE.TH.93TH253   -I----C----F-----D-R
CRF01_AE.TH.98-4      -I----C----F-----D-G
CRF01_AE.TH.CM240     -I-F--C----F-----DQR
CRF01_AE.TH.TH022     ---L--C----F-----D-R
CRF01_AE.TH.TH047     -I-F--C----F-----D-R
CRF02_AG.FR.DJ263     -T---------FN-E-ID-A
CRF02_AG.FR.DJ264     -T---------F--E-MD-A
CRF02_AG.NG.IBNG      -T-F-------F----MD-A
CRF03_AB.RU.KAL1532   -I-F-------------D-A
CRF04_cpx.CY.94CY03   -E-F--C----F-----D-Q
CRF04_cpx.GR.97PVCH   -E-F--C----F-----D-Q
CRF04_cpx.GR.97PVMY   -T-F--C----F-----D-Q
AC.IN.21301           -----------F-----D-R
AC.RW.92RW009         -----------------D-R
AC.SE.SE9488          -I---------F-----N--
AC.ZM.ZAM184          -T-F-------F-----D-S
ACD.SE.SE8603         -T---------F-----D-R
AD.SE.SE6954          -I----I----FE----D-K
AD.SE.SE7108          -T-F-------F-----D--
ADHU.NO.NOGIL3        -E-F-------F-----D-Q
ADU.CD.MAL            -I-F-------F----MS-E
AF.GA.HIV232981       -I-----S---------D-V
AG.NG.G3              -T-F----R--F----MD-A
AG.SE.SE7812          -T-F-------F----MD-A
AGHU.GA.VI354         -I----C----------D-K
AGJ.AU.BFP90          -T-F-------------D-E
AGJ.ML.95ML84         -I---------------D-R
AGU.CD.Z321           -T----C----F-----D-R
BF.BR.93BR029.4       -T-----L---F-----D-E
DF.BE.VI961           -T---------F-----D-E
GH.GA.HIV232993       ----------------LD-T
GU.FR.HIV232974       -T-F-------F----MD-S
U.CD.VI1126           -I----C----F----MD-Q
U.CM.HIV232988        -I---------------D-A
U.FR.HIV232958        -I----C----------D-R
U.FR.HIV232960        -I----C----------D-R

CONSENSUS_CPZ         -?-?--??---F----LTEE
CPZ.GA.CPZGAB         -T-F--C----F----LTEE
CPZ.US.CPZUS          -------Y---F----LTEE
```

LRPGGKKKYKLKHIVWASRE

```
QUERY                LRPGGKKKYKLKHIVWASRE

CONSENSUS_A          ---------r---l------
A.KE.Q23-CXC-CG      ---------RM--LI-----
A.SE.SE6594          ---------R---L------
A.SE.SE7253          ---------RM--L------
A.SE.SE7535          -------Q-R---L------
A.SE.SE8131          -----N---R---L------
A.SE.SE8538          ---------RM--L------
A.SE.SE8891          -------------M---R--
A.UG.92UG037         ---------R---L------
A.UG.U455            -----N---R---L------

CONSENSUS_B          --------------------
B.AU.AF128998        -------T-Q----------
B.-.NL43E9           -------L------I-----
B.AU.MBC18           --------------------
B.AU.MBC200          -------Q-R----------
B.AU.MBC925          ---R-----Q----------
B.AU.MBCC54          ---------Q----------
B.AU.MBCC98          ---------Q----------
B.AU.MBCD36          -----R---Q----------
B.CN.RL42            ---------R---L------
B.DE.D31             ---------R----------
B.DE.HAN             ---------Q----------
B.ES.89SP061         ---------R---L------
B.FR.HXB2            --------------------
B.GA.OYI             ---------Q----------
B.GB.CAM1            --------------------
B.GB.MANC            --------------------
B.JP.JH31            --------------------
B.NL.3202A21         -------R------------
B.TW.LM49            ---------R---L------
B.US.85WCIPR54       --------------------
B.US.AD8             --------------------
B.US.BC              -------------L------
B.US.DH123           --------------------
B.US.JRCSF           ---------R----------
B.US.JRFL            ---------R----------
B.US.MNCG            -------------V------
B.US.NC7             ---------M----------
B.US.NY5CG           -------Q-R----------
B.US.P896            --------------------
B.US.RF              ---R---R------------
B.US.SF2             --------------------
B.US.WC001           --------------------
B.US.WEAU160         -----N--------------
B.US.WR27            ---------R---L------
B.US.YU2             -------Q-R----------

CONSENSUS_C          -------h-m---l------
C.BR.92BR025         -K-----H-MM--L------
C.BW.96BW01B22       -------C-M---L------
C.BW.96BW0402        -------Q-RI--L------
C.BW.96BW0502        -------H-M---L------
C.BW.96BW1104        -------R-MI--L------
C.BW.96BW1210        -------R-MM--L------
C.BW.96BW15B03       S------C-M----------
C.BW.96BW1626        -------R-M---L------
C.BW.96BW17A09       -------H-M---L------
C.ET.ETH2220         -------H-M---L---N--
C.IN.93IN904         -------H-M---L------
C.IN.93IN905         -------H-M---L------
C.IN.93IN999         -------H-M---L------
C.IN.94IN11246       -------H-M---L------
C.IN.95IN21068       -------R-M---L------

CONSENSUS_D          ---------r---l------
D.CD.84ZR085         --------------------
D.CD.ELI             ---------R----------
D.CD.NDK             ---------A---LI-----
D.CD.Z2Z6            ---------R---L------
D.UG.94UG1141        ---------R---L------

CONSENSUS_F          ---------rm--L------
F.BR.BZ162           ---------R---L------
F.CD.VI174           ---------RM--L------
F.RW.VI69            -----R----M--LI-----

CONSENSUS_F1         ---------rm--L------
F1.BE.VI850          -------R--M--LI-----
F1.BR.93BR020.1      ---------R---L------
F1.FI.FIN9363        -------Q-RI--L------
F1.FR.MP411          ---------RM--L------

CONSENSUS_F2         -?-----?-R---?------
F2.CM.MP255          -K-----R-R---L------
F2.CM.MP257          ---------R----------

CONSENSUS_G          -----x---xx--L------
G.BE.DRCBL           -------R-RM--L------
G.FI.HH8793          ---------R---L------
G.NG.92NG083         -----R--------------
G.SE.SE6165          -----R-S--I--L------

CONSENSUS_H          ---------R---L------
H.BE.VI991           -----R---R---L------
H.BE.VI997           ---------R----------
H.CF.90CF056         ---------R---L------

CONSENSUS_J          -------?-RI--L------
J.SE.SE9173          -------Q-RI--L------
J.SE.SE9280          ---------RI--L------

CONSENSUS_K          ---------r---L------
K.BE.VI325           -----S---R---L------
K.CD.EQTB11C         ---------R---L------
K.CM.MP535           -------------L------
N.CM.YBF30           ---------RM--L------

CONSENSUS_O          -?--S--?-R---L------
O.CM.ANT70C          -K--S----R---L------
O.CM.MVP5180         ----S--A-R---L------
CRF01-AE.CF.90CF40   -------Q-RM--L------
CRF01-AE.TH.93TH25   ----------M--L------
CRF01-AE.TH.CM240    -----R---R---L------
CRF01-AE.TH.TH022    -----R---RM--L------
CRF01-AE.TH.TH047    -----R---H----------
CRF02_AG.FR.DJ263    ---------R---L------
CRF02_AG.FR.DJ264    ---A-----R---L------
CRF02_AG.NG.IBNG     ---------R---L------
CRF03_AB.RU.KAL15    ------E--RI--L------
CRF04_cpx.CY.94CY0   ---------R---L------
CRF04_cpx.GR.97PVC   ---------R---L------
CRF04_cpx.GR.97PVM   -------R-RI--LI-----
AC.ET.E3099G         -----N---R---L------
AC.IN.21301          -------H-MI--L------
AC.RW.92RW009        -K-----T-MM--L------
AC.SE.SE9488         ---------RM--L------
AC.ZM.ZAM174-21      -----S-R-MI--L------
AC.ZM.ZAM184         -------Q-RM--L------
AC.ZM.ZAM716-17      -------Q-RI--L------
ACD.SE.SE8603        ---------R---L------
AD.SE.SE6954         -------R-R----------
AD.SE.SE7108         -----R--------------
ADHU.NO.NOGIL3       -------Q-R---L------
ADU.CD.MAL           ---------R---L------
AG.NG.G3             ---------RM--L------
AG.SE.SE7812         ---------R---L------
AGHU.GA.VI354        ---------QI---------
AGJ.AU.BFP90         ----------M--L------
AGJ.ML.95ML8         ---------RM--L------
AGU.CD.Z321          -------Q------------
BF.BR.93BR029.4      -----H---R----------
DF.CD.VI961          ---------R----------
U.CD.VI1126          -----R---R---L------

CONSENSUS_CPZ        ---------Mm--L------
CPZ.CD.CPZANT        ---------MI--L---RS-
CPZ.GA.CPZGAB        -----R-R-MM--L------
CPZ.US.CPZUS         ---------MM--L------
```

Study Subject ID:00RCH97
Study Subject Clone:
Study Subject HLA:A23,B7,B53,Cw4,Cw7
Sequence: Known reactive 20Mer0: PDWQNYTPGPGVRYPLTFGW Nef(122–141)

Possible HLA

A23	A*2301
B53	B*5301
B7	B*07,B*0702,B*0703,B*0704,B*0705,B*0706,B*0707,B*0709,B*0711
Cw4	C4,Cw*0401,C*0401,Cw*0402
Cw7	Cw*0701,Cw*0702,Cw*0704,Cw*0706

Possible Epitopes based on anchor residues

(7-14)	TPGPGVRY	B*5301
(9-16)	GPGVRYPL	B*5301
(7-16)	TPGPGVRYPL	B*5301
(9-16)	GPGVRYPL	B7
(7-16)	TPGPGVRYPL	B7
(9-18)	GPGVRYPLTF	B7
(9-16)	GPGVRYPL	B*0702
(7-16)	TPGPGVRYPL	B*0702
(9-16)	GPGVRYPL	B*0703
(7-16)	TPGPGVRYPL	B*0703
(9-16)	GPGVRYPL	B*0705
(7-16)	TPGPGVRYPL	B*0705
(9-16)	GPGVRYPL	Cw*0401
(7-16)	TPGPGVRYPL	Cw*0401
(9-18)	GPGVRYPLTF	Cw*0401
(6-14)	YTPGPGVRY	Cw*0702
(8-16)	PGPGVRYPL	Cw*0702
(10-18)	PGVRYPLTF	Cw*0702
(7-14)	TPGPGVRY	Cw*0702
(9-16)	GPGVRYPL	Cw*0702
(11-18)	GVRYPLTF	Cw*0702
(5-14)	NYTPGPGVRY	Cw*0702
(7-16)	TPGPGVRYPL	Cw*0702
(9-18)	GPGVRYPLTF	Cw*0702

Anchor Residues Searched

B*5301	X[P]XXXXXX[LIVMY]
B*5301	X[P]XXXXX[LIVMY]

B*5301	X[P]XXXXXXX[LIVMY]
B7	X[P]XXXXXX[LF]
B7	X[P]XXXXX[LF]
B7	X[P]XXXXXXX[LF]
B*0702	X[P]XXXXXX[L]
B*0702	X[P]XXXXX[L]
B*0702	X[P]XXXXXXX[L]
B*0703	X[P]XXXXXX[L]
B*0703	X[P]XXXXX[L]
B*0703	X[P]XXXXXXX[L]
B*0705	X[P]XXXXXX[L]
B*0705	X[P]XXXXX[L]
B*0705	X[P]XXXXXXX[L]
Cw*0401	X[YPF]XXXXXX[LF]
Cw*0401	X[YPF]XXXXX[LF]
Cw*0401	X[YPF]XXXXXXX[LF]
Cw*0702	XXXXXXXX[YFL]
Cw*0702	XXXXXXX[YFL]
Cw*0702	XXXXXXXXX[YFL]

Study Subject ID:00RCH97
Study Subject Clone:
Study Subject HLA:A23,B7,B53,Cw4,Cw7
Sequence: Known reactive 20Mer1: GVRYPLTFGWCYKLVPVEPD Nef(132–151)

Possible HLA

A23	A*2301
B53	B*5301
B7	B*07,B*0702,B*0703,B*0704,B*0705,B*0706,B*0707,B*0709,B*0711
Cw4	C4,Cw*0401,C*0401,Cw*0402
Cw7	Cw*0701,Cw*0702,Cw*0704,Cw*0706

Possible Epitopes based on anchor residues

(4-12)	YPLTFGWCY	B*5301
(7-14)	TFGWCYKL	Cw*0401
(4-12)	YPLTFGWCY	Cw*0702
(6-14)	LTFGWCYKL	Cw*0702
(1-8)	GVRYPLTF	Cw*0702
(5-12)	PLTFGWCY	Cw*0702
(7-14)	TFGWCYKL	Cw*0702
(3-12)	RYPLTFGWCY	Cw*0702
(5-14)	PLTFGWCYKL	Cw*0702

Anchor Residues Searched

B*5301	X[P]XXXXXX[LIVMY]
B*5301	X[P]XXXXX[LIVMY]
B*5301	X[P]XXXXXXX[LIVMY]
B7	X[P]XXXXXX[LF]
B7	X[P]XXXXX[LF]
B7	X[P]XXXXXXX[LF]
B*0702	X[P]XXXXXX[L]
B*0702	X[P]XXXXX[L]
B*0702	X[P]XXXXXXX[L]
B*0703	X[P]XXXXXX[L]
B*0703	X[P]XXXXX[L]
B*0703	X[P]XXXXXXX[L]
B*0705	X[P]XXXXXX[L]
B*0705	X[P]XXXXX[L]
B*0705	X[P]XXXXXXX[L]
Cw*0401	X[YPF]XXXXXX[LF]
Cw*0401	X[YPF]XXXXX[LF]

Cw*0401	X[YPF]XXXXXXX[LF]
Cw*0702	XXXXXXXX[YFL]
Cw*0702	XXXXXXX[YFL]
Cw*0702	XXXXXXXXX[YFL]

Study Subject ID:00RCH97
Study Subject Clone:
Study Subject HLA:A23,B7,B53,Cw4,Cw7
Sequence: Known reactive 20Mer2: LRPGGKKKYKLKHIVWASRE p17(21–40)

Possible HLA

A23	A*2301
B53	B*5301
B7	B*07,B*0702,B*0703,B*0704,B*0705,B*0706,B*0707,B*0709,B*0711
Cw4	C4,Cw*0401,C*0401,Cw*0402
Cw7	Cw*0701,Cw*0702,Cw*0704,Cw*0706

Possible Epitopes based on anchor residues

(2-9)	RPGGKKKY	B*5301
(2-11)	RPGGKKKYKL	B*5301
(2-11)	RPGGKKKYKL	B7
(2-11)	RPGGKKKYKL	B*0702
(2-11)	RPGGKKKYKL	B*0703
(2-11)	RPGGKKKYKL	B*0705
(2-11)	RPGGKKKYKL	Cw*0401
(1-9)	LRPGGKKKY	Cw*0702
(3-11)	PGGKKKYKL	Cw*0702
(2-9)	RPGGKKKY	Cw*0702
(4-11)	GGKKKYKL	Cw*0702
(2-11)	RPGGKKKYKL	Cw*0702

Anchor Residues Searched

B*5301	X[P]XXXXXX[LIVMY]
B*5301	X[P]XXXXX[LIVMY]
B*5301	X[P]XXXXXXX[LIVMY]
B7	X[P]XXXXXX[LF]
B7	X[P]XXXXX[LF]
B7	X[P]XXXXXXX[LF]
B*0702	X[P]XXXXXX[L]
B*0702	X[P]XXXXX[L]
B*0702	X[P]XXXXXXX[L]
B*0703	X[P]XXXXXX[L]
B*0703	X[P]XXXXX[L]
B*0703	X[P]XXXXXXX[L]
B*0705	X[P]XXXXXX[L]
B*0705	X[P]XXXXX[L]

B*0705	X[P]XXXXXXX[L]
Cw*0401	X[YPF]XXXXXX[LF]
Cw*0401	X[YPF]XXXXX[LF]
Cw*0401	X[YPF]XXXXXXX[LF]
Cw*0702	XXXXXXXX[YFL]
Cw*0702	XXXXXXX[YFL]
Cw*0702	XXXXXXXXX[YFL]

This table lists epitopes that are experimentally observed to be presented by a HLA type carried by the patient, but the de£ned epitope has substitutions relative to the peptides from your reference strains and so might be missed by your reagents: in HXB2 for Gag, Pol; MN for Env; BRU for Nef, relative to most B clade Sequences in the database:

Protein	Epitope in Database	Epitope in Ref. strain	Epitope in Consensus B	HLA	Notes
p17(22–31)	RPGGKKRYKL	RPGGKKKYKL	RPGGKKKYKL	B7	
p24(47–56)	ATPQDLNMML	ATPQDLNTML	ATPQDLNTML	B53	
p24(48–56)	TPYDINQML	TPQDLNTML	TPQDLNTML	B*5301	
p24(48–56)	TPQDLNQML	TPQDLNTML	TPQDLNTML	B53	
p24(48–56)	TPYDINQML	TPQDLNTML	TPQDLNTML	B53	
p24(223–231)	GPSHKARVL	GPGHKARVL	GPGHKARVL	B7	
gp160(298–307)	RPNNNTRKSI	RPNYNKRKRI	RPNNNTRKSI	B*07	
gp160(298–307)	RPNNNTRKSI	RPNYNKRKRI	RPNNNTRKSI	B*0702	
gp160(298–307)	RPNNNTRKSI	RPNYNKRKRI	RPNNNTRKSI	B7	
gp160(298–307)	RPNNNTRKSI	RPNYNKRKRI	RPNNNTRKSI	B7?	
gp160(298–307)	RPNNNTRKSI	RPNYNKRKRI	RPNNNTRKSI	B7	
gp160(843–851)	IPRRIRQGL	IPTRIRQGL	IPRRIRQGL	B*0702	
gp160(843–851)	IPRRIRQGL	IPTRIRQGL	IPRRIRQGL	B7	
Nef(73–82)	SVPLRPMTYK	QVPLRPMTYK	QVPLRPMTYK	B35 or C4	
Nef(77–85)	RPMTYKAAL	RPMTYKAAV	RPMTYKAAV	B*0702	
Nef(175–184)	DPEKEVLQWK	DPEREVLEWR	DPEKEVLVWK	B7	

Table 1: **p17**

HXB2 Location	Author Location	Sequence	Immunogen	Species(HLA)	References
p17(22–31)	Gag(22–31)	RPGGKKRYKL	HIV-1 infection	human(B7)	[Jin (2000)]
	• This B7 epitope is one of three subdominant CTL responses detected in a long-term non-progressor • A dominant B7 epitope was de£ned using conventional methods, and three additional sub-dominant HLA B7 epitopes were de£ned by £rst using a non-anchor based strategy, EpiMatrix, to identify 2078 possible epitopes in the autologous HIV-1, followed by B7 anchor residue prediction to narrow the set to 55 peptides for experimental testing				

Table 2: **p24**

HXB2 Location	Author Location	Sequence	Immunogen	Species(HLA)	References
p24(47–56)	p24()	ATPQDLNMML	HIV-1 exposed seronegative	human(B53)	[Kaul (2000)]
	• 11/16 heavily HIV exposed but persistently seronegative sex-workers in Nairobi had HIV-speci£c CD8 gamma-IFN responses in the cervix – systemic CD8+ T cell responses tended to be to the same epitopes but at generally lower levels than cervical CD8+ T cell responses • Low risk individuals did not have such CD8+ cells • CD8+ epitopes T cell DTVLEDINL (3 individuals), SLYNVATL (4 individuals), LSPRTLNAW (3 individuals) and YPLTFGWCF (4 individuals) were most commonly recognized by the HIV-resistant women				
p24(48–56)	Gag(173–181 HIV-2)	TPYDINQML	HIV-2	human(B*5301)	[Brander & Goulder(2001)]
	• C. Brander notes this is a B*5301 epitope				
p24(48–56)	p24()	TPQDLNQML		human(B53)	[Rowland-Jones (1999)]
	• CTL responses in seronegative highly HIV-exposed African female sex workers in Gambia and Nairobi were studied – these women had no delta 32 deletion in CCR5 • In Gambia there is exposure to both HIV-1 and HIV-2, CTL responses to B35 epitopes in exposed, uninfected women are cross-reactive, and the B35 allele seems to be protective • HIV-2 sequence: TPYDINQML, no cross-reactivity, [Gotch (1993)]				
p24(48–56)	Gag(173–181 HIV-2)	TPYDINQML	HIV-2	human(B53)	[Gotch (1993)]
p24(223–231)	p24()	GPSHKARVL	HIV-1 infection	human(B7)	[Goulder (2000)]
	• The CTL-dominant response was focused on this epitope in a HIV+ Caucasian living in Boston – this epitope did not fall within the three most recognized peptides in the study • Three peptides GSEELRSLYNTVATL (p17 residues 71-85), SALSEGATPQDLNTMLNTVG (p24 41-60), and WEKIRLRPG-GKKKYKLK(p17 16-30) contained the dominant Gag-speci£c epitope in 31 out of 44 B-clade infected individuals from Boston who showed Gag-CTL responses • Five peptides RLRPGGKKHYMIKHLVW (p17 20-36), ELRSLYNTVATLYCV (p17Gag 74-88), SALSEGATPQDLNTMLNTVG (p24 41-60), FRDYVDRFFKTLRAEQA (p24 161-177), and SILDIKQGKEPFRDY (p24 149-164) contained dominant Gag-speci£c epitopes in 32 out of 37 C-clade infected subjects from South Africa				

Table 3: **gp160**

HXB2 Location	Author Location	Sequence	Immunogen	Species(HLA)	References
gp160(298–307)	gp120(298–307)	RPNNNTRKSI	HIV-1 infection	human(B*07)	[Ferris (1999), Hammond (1995)]
	• The processing of this epitope is TAP1/2-dependent, as are most Env epitopes, and it contains an N-linked glycosylation site that is glycosylated in Env • Peptide that had been deglycosylated, a process that changes asparagine (N) to aspartic acid (D) (RPNDNTRKSI) was recognized a 100-fold more ef£ciently than either glycosylated or non-glycosylated RPNNNTRKSI • Position 5 is not involved with HLA B*07 binding, so is probably important for TCR recognition • HIV-1 Env epitopes are typically processed by a TAP1/2 dependent mechanism, which involves cotranslational translocation into the ER, glycosylation, export back into the cytosol, and deglycosylation for processing, and retransport into the ER for the association with class I molecules • The particular pathway of generating an epitope may have an impact on the presentation of that epitope, quantitatively as well as qualitatively				
gp160(298–307)	gp120(302–312 HXB2)	RPNNNTRKSI	HIV-1 infection	human(B*0702)	[Brander & Goulder(2001)]
	• C. Brander notes this is a B*0702 epitope				
gp160(298–307)	gp120(302–312 HXB2)	RPNNNTRKSI	HIV-1 infection	human(B7)	[Safrit (1994)]
	• CTL from two acute seroconversion cases				
gp160(298–307)	gp120(303–312 IIIB)	RPNNNTRKSI	HIV-1 infection	human(B7?)	[Wilson (1996)]
	• Epitope de£ned in the context of the Pediatric AIDS Foundation ARIEL Project, a mother-infant HIV transmission study • RPNNNTRKDI and RPNNNTRKGI, naturally occurring variants, were found in non-transmitting mother – ability to recognize these variants has not yet been determined				
gp160(298–307)	gp120(302–311 Clade B)	RPNNNTRKSI	HIV-1 infection	human(B7)	[Wilson (1998)]
	• The extent of CTL interclade cross-reactivity from CTL isolated from individuals newly infected with B clade virus was studied, and extensive cross-reactivity was observed • Two HLA B7 individuals had CTL response to B_LAI, A_92UG037 and C_92BR025 gp160, but were B clade strain MN non-responders – the authors note that the B7 epitope RPNNNTRKSI is immunodominant, conserved between the LAI and clade A and C strains, but is very divergent in MN (RPNYNKRKRI), and that this epitope might be dominating the speci£city of the response in the HLA B7 individuals				
gp160(843–851)	gp41(848–856 LAI)	IPRRIRQGL		human(B*0702)	[Brander & Goulder(2001)]
	• C. Brander notes this is a B*0702 epitope				

HXB2 Location	Author Location	Sequence	Immunogen	Species(HLA)	References
gp160(843–851)	gp41(848–856 LAI)	IPRRIRQGL		human(B7)	[Brander & Walker(1995)]
	• Epitope de£ned in the context of the Pediatric AIDS Foundation ARIEL Project, a mother-infant HIV transmission study				

Table 4: **Nef**

HXB2 Location	Author Location	Sequence	Immunogen	Species(HLA)	References
Nef(73–82)	Nef(73–82 LAI)	SVPLRPMTYK	HIV-1 infection	human(B35 or C4)	[Buseyne (1993)]
	• Vertical transmission of HIV ranges from 13% to 39% • Primary assays showed cytotoxic activity against at least one HIV protein was detected in 70% of infected children • Epitopes recognized in £ve children were mapped using synthetic peptides and secondary cultures • Patient EM13, who had a CTL response to three epitopes in Nef, was infected via blood transfusion after birth and went from CDC stage P2A to P2E during the study				
Nef(77–85)	Nef(77–85 LAI)	RPMTYKAAL	HIV-1 infection	human(B*0702)	[Bauer (1997)]
	• Structural constraints on the Nef protein may prevent escape • Noted in Brander 1999, this database, to be B*0702				
Nef(175–184)	Nef(175–184)	DPEKEVLQWK	HIV-1 infection	human(B7)	[Jin (2000)]
	• This a B7 epitope, a subdominant CTL response, was de£ned by an un-conventional approach used to predict epitopes in an HLA B7+ long-term non-progressor • Three additional sub-dominant HLA B7 epitopes were de£ned using EpiMatrix, a non-anchor based strategy for de£ning potential epitopes, which highlighted 2078 possible epitopes in the autologous HIV-1 derived from the study subject, followed by B7 anchor residue prediction which narrowed the set to 55 peptides, three of which could serve as functional CTL epitopes				

Table 5: **All De£ned Epitopes within the 20mer, regardless of HLA type**

HXB2 Location	Author Location	Sequence	Immunogen	Species(HLA)	References
Nef(122–141)	Nef(121–140 SF2)	PDWQNYTPGPGVRYPLTFGW	HIV-1 infection	human()	[Lieberman (1997)]
	• Of 25 patients, most had CTL speci£c for more than 1 HIV-1 protein • Eleven subjects had CTL that could recognize vaccinia-expressed LAI Nef • Three of these 11 had CTL response to this peptide • The responding subjects were HLA-A2, B21; HLA-A3, A24, B7, B38				
Nef(123–137)	Nef(123–137 IIIB)	QWQNYTPGPGVRYPL	HIV-1 infection	human()	[Wilson (1996)]
	• Epitope de£ned in the context of the Pediatric AIDS Foundation ARIEL Project, a mother-infant HIV transmission study • FFPDYTPGPGTRFPL and FFPDYKPGPGTRFPL, naturally occurring variants, were found in mother and are not recognized • LFPDYKPGPGTRFPL and FFPDYKPGPGTRFPL, naturally occurring variants, were found in infant and are not recognized				
Nef(126–138)	Nef(126–138 BRU)	NYTPGPGVRYPLT	HIV-1 infection	human(B7)	[Culmann (1991)]
	• Nef CTL clones from HIV+ donors				
Nef(128–137)	Nef(128–137 LAI)	TPGPGVRYPL	HIV-1 infection	human(B*0702)	[Brander & Goulder(2001)]
	• C. Brander notes this is a B*0702 epitope				
Nef(128–137)	Nef(128–137 LAI)	TPGPGVRYPL		human(B*4201)	[Brander & Goulder(2001)]
	• C. Brander notes this is a B*4201 epitope				
Nef(128–137)	()	TPGPGVRYPL	HIV-1 infection	human(B7)	[Wilson (2000)]
	• Three individuals with highly focused HIV-speci£c CTL responses were studied during acute infection using tetramers – high frequencies of HIV-1-speci£c CD8+ T cells were found prior to seroconversion, and there was a close temporal relationship between the number of circulating HIV-speci£c T cells and viral load was also found • All three patients were B*2705, with HLA alleles: A1, A30/31, B*2705, B35; A1, A*0301, B7, B*2705; and A*0201, A*0301, B*2705, B39 • ELISPOT was used to test a panel of CTL epitopes that had been de£ned earlier and were appropriate for the HLA haplotypes of the study subjects – 3/3 subjects showed a dominant response to the B*2705 epitope KRWIILGGLNK • The subject with A*0201 had a moderatly strong response to SLYNTVATL • Weak responses were observed to A*301-RLRPGGKKK, A*301-QVPLRPMTYK, and B7-TPGPGVRYPL in the subject who was HLA A1, A*0301, B7, B*2705 • No acute response was detected to the following epitopes: A*201-ILKEPVHGV, A*301-KIRLRPGGK, A*301-AIFQSSMTK, A*301-TVYYGVPVWK, B35-EPIVGAETF, B35-HPDIVIYQY, B35-PPIPVGEIY, B35-NSSKVSQNY, B35-VPLRPMTY, B35-DPNPQEVVL				

HXB2 Location	Author Location	Sequence	Immunogen	Species(HLA)	References
Nef(128–137)	Nef(128–137 LAI)	TPGPGVRYPL	HIV-1 infection	human(B7)	[Haas (1996), Haas (1997)]
	• There was a high degree of variation in three CTL epitopes in Nef in four slow and non-progressors, and variant speci£c CTLs arose over time to eliminate variants, indicating immune selection • The epitope position was taken from [Haas (1997)]				
Nef(128–137)	Nef()	TPGPGVRYPL	HIV-1 exposure	human(B7)	[Rowland-Jones (1998a)]
	• A CTL response was found in exposed but uninfected prostitutes from Nairobi using previously-de£ned B clade epitopes that tended to be conserved in A and D clades – such cross-reactivity could protect against both A and D and confer protection in Nairobi where both subtypes are circulating • The D subtype consensus is identical to the B clade epitope • The A subtype consensus is TPGPGIRYPL				
Nef(128–137)	Nef()	TPGPGVRYPL	HIV-1 exposure	human(B7)	[Rowland-Jones (1998b)]
	• HIV-speci£c CTL were found in exposed seronegative prostitutes from Nairobi – these CTL may confer protection • Seroprevalence in this cohort is 90-95% and their HIV-1 exposure is among the highest in the world • Most isolated HIV strains are clade A in Nairobi, although clades C and D are also found – B clade epitopes are often cross-reactive, however stronger responses are frequently observed using A or D clade versions of epitopes • This epitope is conserved among B and D clade viruses • The Clade A version of the epitope: TPGPGIRYPL				
Nef(128–137)	Nef(128–137)	TPGPGVRYPL	*in vitro* stimulation	human(B7)	[Wilson (1999)]
	• Dendritic cells are the most potent for priming T cell responses – DCs can stimulate autologous CTL responses from T cells cultured from HIV negative donors • Th1-biasing cytokines IL-12 or IFN alpha enhance CTL responses *in vitro* whether the epitope is delivered by pulsing from peptide, or expressed from within • CTL from a B7 donor displayed no reactivity to this epitope, although it had been immunodominant in another study [Haas (1996)]				
Nef(128–137)	Nef()	TPGPGVRYPL	HIV-1 exposure	human(B7(B*8101))	[Rowland-Jones (1998b)]
	• HIV-speci£c CTL were found in exposed seronegative prostitutes from Nairobi – these CTL may confer protection • Seroprevalence in this cohort is 90-95% and their HIV-1 exposure is among the highest in the world • Most isolated HIV strains are clade A in Nairobi, although clades C and D are also found – B clade epitopes are often cross-reactive, however stronger responses are frequently observed using A or D clade versions of epitopes • Clade A version of the epitope: TPGPGIRYPL, clade D version: TPGPGIRYPL				

HXB2 Location	Author Location	Sequence	Immunogen	Species(HLA)	References
Nef(128–137)	Nef(128–137 Clade B)	TPGPGVRYPL	HIV-1 exposed seronegative	human(B7,B*8101)	[Kaul (2000)]
	• 11/16 heavily HIV exposed but persistently seronegative sex-workers in Nairobi had HIV-speci£c CD8 gamma-IFN responses in the cervix – systemic CD8+ T cell responses tended to be to the same epitopes but at generally lower levels than cervical CD8+ T cell responses • Low risk individuals did not have such CD8+ cells • CD8+ epitopes T cell DTVLEDINL (3 individuals), SLYNVATL (4 individuals), LSPRTLNAW (3 individuals) and YPLTFGWCF (4 individuals) were most commonly recognized by the HIV-resistant women				
Nef(134–141)	Nef(138–147 LAI)	RYPLTFGW	HIV-1 infection	human(A*2402)	[Brander & Goulder(2001)]
	• C. Brander notes this is an A*2402 epitope				
Nef(134–141)	Nef(134–141 LAI)	RYPLTFGW		human(B27)	[Culmann(1998)]
	• Optimal peptide de£ned by titration				

Table 6: **All De£ned Epitopes within the 20mer, regardless of HLA type**

HXB2 Location	Author Location	Sequence	Immunogen	Species(HLA)	References
Nef(122–141)	Nef(121–140 SF2)	PDWQNYTPGPGVRYPLTFGW	HIV-1 infection	human()	[Lieberman (1997)]
	• Of 25 patients, most had CTL speci£c for more than 1 HIV-1 protein • Eleven subjects had CTL that could recognize vaccinia-expressed LAI Nef • Three of these 11 had CTL response to this peptide • The responding subjects were HLA-A2, B21; HLA-A3, A24, B7, B38				
Nef(123–137)	Nef(123–137 IIIB)	QWQNYTPGPGVRYPL	HIV-1 infection	human()	[Wilson (1996)]
	• Epitope de£ned in the context of the Pediatric AIDS Foundation ARIEL Project, a mother-infant HIV transmission study • FFPDYTPGPGTRFPL and FFPDYKPGPGTRFPL, naturally occurring variants, were found in mother and are not recognized • LFPDYKPGPGTRFPL and FFPDYKPGPGTRFPL, naturally occurring variants, were found in infant and are not recognized				
Nef(126–138)	Nef(126–138 BRU)	NYTPGPGVRYPLT	HIV-1 infection	human(B7)	[Culmann (1991)]
	• Nef CTL clones from HIV+ donors				
Nef(128–137)	Nef(128–137 LAI)	TPGPGVRYPL	HIV-1 infection	human(B*0702)	[Brander & Goulder(2001)]
	• C. Brander notes this is a B*0702 epitope				
Nef(128–137)	Nef(128–137 LAI)	TPGPGVRYPL		human(B*4201)	[Brander & Goulder(2001)]
	• C. Brander notes this is a B*4201 epitope				
Nef(128–137)	()	TPGPGVRYPL	HIV-1 infection	human(B7)	[Wilson (2000)]
	• Three individuals with highly focused HIV-speci£c CTL responses were studied during acute infection using tetramers – high frequencies of HIV-1-speci£c CD8+ T cells were found prior to seroconversion, and there was a close temporal relationship between the number of circulating HIV-speci£c T cells and viral load was also found • All three patients were B*2705, with HLA alleles: A1, A30/31, B*2705, B35; A1, A*0301, B7, B*2705; and A*0201, A*0301, B*2705, B39 • ELISPOT was used to test a panel of CTL epitopes that had been de£ned earlier and were appropriate for the HLA haplotypes of the study subjects – 3/3 subjects showed a dominant response to the B*2705 epitope KRWIILGGLNK • The subject with A*0201 had a moderatly strong response to SLYNTVATL • Weak responses were observed to A*301-RLRPGGKKK, A*301-QVPLRPMTYK, and B7-TPGPGVRYPL in the subject who was HLA A1, A*0301, B7, B*2705 • No acute response was detected to the following epitopes: A*201-ILKEPVHGV, A*301-KIRLRPGGK, A*301-AIFQSSMTK, A*301-TVYYGVPVWK, B35-EPIVGAETF, B35-HPDIVIYQY, B35-PPIPVGEIY, B35-NSSKVSQNY, B35-VPLRPMTY, B35-DPNPQEVVL				

HXB2 Location	Author Location	Sequence	Immunogen	Species(HLA)	References
Nef(128–137)	Nef(128–137 LAI)	TPGPGVRYPL	HIV-1 infection	human(B7)	[Haas (1996), Haas (1997)]
	• There was a high degree of variation in three CTL epitopes in Nef in four slow and non-progressors, and variant speci£c CTLs arose over time to eliminate variants, indicating immune selection • The epitope position was taken from [Haas (1997)]				
Nef(128–137)	Nef()	TPGPGVRYPL	HIV-1 exposure	human(B7)	[Rowland-Jones (1998a)]
	• A CTL response was found in exposed but uninfected prostitutes from Nairobi using previously-de£ned B clade epitopes that tended to be conserved in A and D clades – such cross-reactivity could protect against both A and D and confer protection in Nairobi where both subtypes are circulating • The D subtype consensus is identical to the B clade epitope • The A subtype consensus is TPGPGIRYPL				
Nef(128–137)	Nef()	TPGPGVRYPL	HIV-1 exposure	human(B7)	[Rowland-Jones (1998b)]
	• HIV-speci£c CTL were found in exposed seronegative prostitutes from Nairobi – these CTL may confer protection • Seroprevalence in this cohort is 90-95% and their HIV-1 exposure is among the highest in the world • Most isolated HIV strains are clade A in Nairobi, although clades C and D are also found – B clade epitopes are often cross-reactive, however stronger responses are frequently observed using A or D clade versions of epitopes • This epitope is conserved among B and D clade viruses • The Clade A version of the epitope: TPGPGIRYPL				
Nef(128–137)	Nef(128–137)	TPGPGVRYPL	*in vitro* stimulation	human(B7)	[Wilson (1999)]
	• Dendritic cells are the most potent for priming T cell responses – DCs can stimulate autologous CTL responses from T cells cultured from HIV negative donors • Th1-biasing cytokines IL-12 or IFN alpha enhance CTL responses *in vitro* whether the epitope is delivered by pulsing from peptide, or expressed from within • CTL from a B7 donor displayed no reactivity to this epitope, although it had been immunodominant in another study [Haas (1996)]				
Nef(128–137)	Nef()	TPGPGVRYPL	HIV-1 exposure	human(B7(B*8101))	[Rowland-Jones (1998b)]
	• HIV-speci£c CTL were found in exposed seronegative prostitutes from Nairobi – these CTL may confer protection • Seroprevalence in this cohort is 90-95% and their HIV-1 exposure is among the highest in the world • Most isolated HIV strains are clade A in Nairobi, although clades C and D are also found – B clade epitopes are often cross-reactive, however stronger responses are frequently observed using A or D clade versions of epitopes • Clade A version of the epitope: TPGPGIRYPL, clade D version: TPGPGIRYPL				

HXB2 Location	Author Location	Sequence	Immunogen	Species(HLA)	References
Nef(128–137)	Nef(128–137 Clade B)	TPGPGVRYPL	HIV-1 exposed seronegative	human(B7,B*8101)	[Kaul (2000)]
	• 11/16 heavily HIV exposed but persistently seronegative sex-workers in Nairobi had HIV-speci£c CD8 gamma-IFN responses in the cervix – systemic CD8+ T cell responses tended to be to the same epitopes but at generally lower levels than cervical CD8+ T cell responses • Low risk individuals did not have such CD8+ cells • CD8+ epitopes T cell DTVLEDINL (3 individuals), SLYNVATL (4 individuals), LSPRTLNAW (3 individuals) and YPLTFGWCF (4 individuals) were most commonly recognized by the HIV-resistant women				
Nef(134–141)	Nef(138–147 LAI)	RYPLTFGW	HIV-1 infection	human(A*2402)	[Brander & Goulder(2001)]
	• C. Brander notes this is an A*2402 epitope				
Nef(134–141)	Nef(134–141 LAI)	RYPLTFGW		human(B27)	[Culmann(1998)]
	• Optimal peptide de£ned by titration				

Table 7: **All De£ned Epitopes within the 20mer, regardless of HLA type**

HXB2 Location	Author Location	Sequence	Immunogen	Species(HLA)	References
Nef(122–141)	Nef(121–140 SF2)	PDWQNYTPGPGVRYPLTFGW	HIV-1 infection	human()	[Lieberman (1997)]
	• Of 25 patients, most had CTL speci£c for more than 1 HIV-1 protein • Eleven subjects had CTL that could recognize vaccinia-expressed LAI Nef • Three of these 11 had CTL response to this peptide • The responding subjects were HLA-A2, B21; HLA-A3, A24, B7, B38				
Nef(123–137)	Nef(123–137 IIIB)	QWQNYTPGPGVRYPL	HIV-1 infection	human()	[Wilson (1996)]
	• Epitope de£ned in the context of the Pediatric AIDS Foundation ARIEL Project, a mother-infant HIV transmission study • FFPDYTPGPGTRFPL and FFPDYKPGPGTRFPL, naturally occurring variants, were found in mother and are not recognized • LFPDYKPGPGTRFPL and FFPDYKPGPGTRFPL, naturally occurring variants, were found in infant and are not recognized				
Nef(126–138)	Nef(126–138 BRU)	NYTPGPGVRYPLT	HIV-1 infection	human(B7)	[Culmann (1991)]
	• Nef CTL clones from HIV+ donors				
Nef(128–137)	Nef(128–137 LAI)	TPGPGVRYPL	HIV-1 infection	human(B*0702)	[Brander & Goulder(2001)]
	• C. Brander notes this is a B*0702 epitope				
Nef(128–137)	Nef(128–137 LAI)	TPGPGVRYPL		human(B*4201)	[Brander & Goulder(2001)]
	• C. Brander notes this is a B*4201 epitope				
Nef(128–137)	()	TPGPGVRYPL	HIV-1 infection	human(B7)	[Wilson (2000)]
	• Three individuals with highly focused HIV-speci£c CTL responses were studied during acute infection using tetramers – high frequencies of HIV-1-speci£c CD8+ T cells were found prior to seroconversion, and there was a close temporal relationship between the number of circulating HIV-speci£c T cells and viral load was also found • All three patients were B*2705, with HLA alleles: A1, A30/31, B*2705, B35; A1, A*0301, B7, B*2705; and A*0201, A*0301, B*2705, B39 • ELISPOT was used to test a panel of CTL epitopes that had been de£ned earlier and were appropriate for the HLA haplotypes of the study subjects – 3/3 subjects showed a dominant response to the B*2705 epitope KRWIILGGLNK • The subject with A*0201 had a moderatly strong response to SLYNTVATL • Weak responses were observed to A*301-RLRPGGKKK, A*301-QVPLRPMTYK, and B7-TPGPGVRYPL in the subject who was HLA A1, A*0301, B7, B*2705 • No acute response was detected to the following epitopes: A*201-ILKEPVHGV, A*301-KIRLRPGGK, A*301-AIFQSSMTK, A*301-TVYYGVPVWK, B35-EPIVGAETF, B35-HPDIVIYQY, B35-PPIPVGEIY, B35-NSSKVSQNY, B35-VPLRPMTY, B35-DPNPQEVVL				

HXB2 Location	Author Location	Sequence	Immunogen	Species(HLA)	References
Nef(128–137)	Nef(128–137 LAI)	TPGPGVRYPL	HIV-1 infection	human(B7)	[Haas (1996), Haas (1997)]
	• There was a high degree of variation in three CTL epitopes in Nef in four slow and non-progressors, and variant speci£c CTLs arose over time to eliminate variants, indicating immune selection • The epitope position was taken from [Haas (1997)]				
Nef(128–137)	Nef()	TPGPGVRYPL	HIV-1 exposure	human(B7)	[Rowland-Jones (1998a)]
	• A CTL response was found in exposed but uninfected prostitutes from Nairobi using previously-de£ned B clade epitopes that tended to be conserved in A and D clades – such cross-reactivity could protect against both A and D and confer protection in Nairobi where both subtypes are circulating • The D subtype consensus is identical to the B clade epitope • The A subtype consensus is TPGPGIRYPL				
Nef(128–137)	Nef()	TPGPGVRYPL	HIV-1 exposure	human(B7)	[Rowland-Jones (1998b)]
	• HIV-speci£c CTL were found in exposed seronegative prostitutes from Nairobi – these CTL may confer protection • Seroprevalence in this cohort is 90-95% and their HIV-1 exposure is among the highest in the world • Most isolated HIV strains are clade A in Nairobi, although clades C and D are also found – B clade epitopes are often cross-reactive, however stronger responses are frequently observed using A or D clade versions of epitopes • This epitope is conserved among B and D clade viruses • The Clade A version of the epitope: TPGPGIRYPL				
Nef(128–137)	Nef(128–137)	TPGPGVRYPL	*in vitro* stimulation	human(B7)	[Wilson (1999)]
	• Dendritic cells are the most potent for priming T cell responses – DCs can stimulate autologous CTL responses from T cells cultured from HIV negative donors • Th1-biasing cytokines IL-12 or IFN alpha enhance CTL responses *in vitro* whether the epitope is delivered by pulsing from peptide, or expressed from within • CTL from a B7 donor displayed no reactivity to this epitope, although it had been immunodominant in another study [Haas (1996)]				
Nef(128–137)	Nef()	TPGPGVRYPL	HIV-1 exposure	human(B7(B*8101))	[Rowland-Jones (1998b)]
	• HIV-speci£c CTL were found in exposed seronegative prostitutes from Nairobi – these CTL may confer protection • Seroprevalence in this cohort is 90-95% and their HIV-1 exposure is among the highest in the world • Most isolated HIV strains are clade A in Nairobi, although clades C and D are also found – B clade epitopes are often cross-reactive, however stronger responses are frequently observed using A or D clade versions of epitopes • Clade A version of the epitope: TPGPGIRYPL, clade D version: TPGPGIRYPL				

HXB2 Location	Author Location	Sequence	Immunogen	Species(HLA)	References
Nef(128–137)	Nef(128–137 Clade B)	TPGPGVRYPL	HIV-1 exposed seronegative	human(B7,B*8101)	[Kaul (2000)]
	• 11/16 heavily HIV exposed but persistently seronegative sex-workers in Nairobi had HIV-speci£c CD8 gamma-IFN responses in the cervix – systemic CD8+ T cell responses tended to be to the same epitopes but at generally lower levels than cervical CD8+ T cell responses • Low risk individuals did not have such CD8+ cells • CD8+ epitopes T cell DTVLEDINL (3 individuals), SLYNVATL (4 individuals), LSPRTLNAW (3 individuals) and YPLTFGWCF (4 individuals) were most commonly recognized by the HIV-resistant women				
Nef(134–141)	Nef(138–147 LAI)	RYPLTFGW	HIV-1 infection	human(A*2402)	[Brander & Goulder(2001)]
	• C. Brander notes this is an A*2402 epitope				
Nef(134–141)	Nef(134–141 LAI)	RYPLTFGW		human(B27)	[Culmann(1998)]
	• Optimal peptide de£ned by titration				

p17 CTL Map

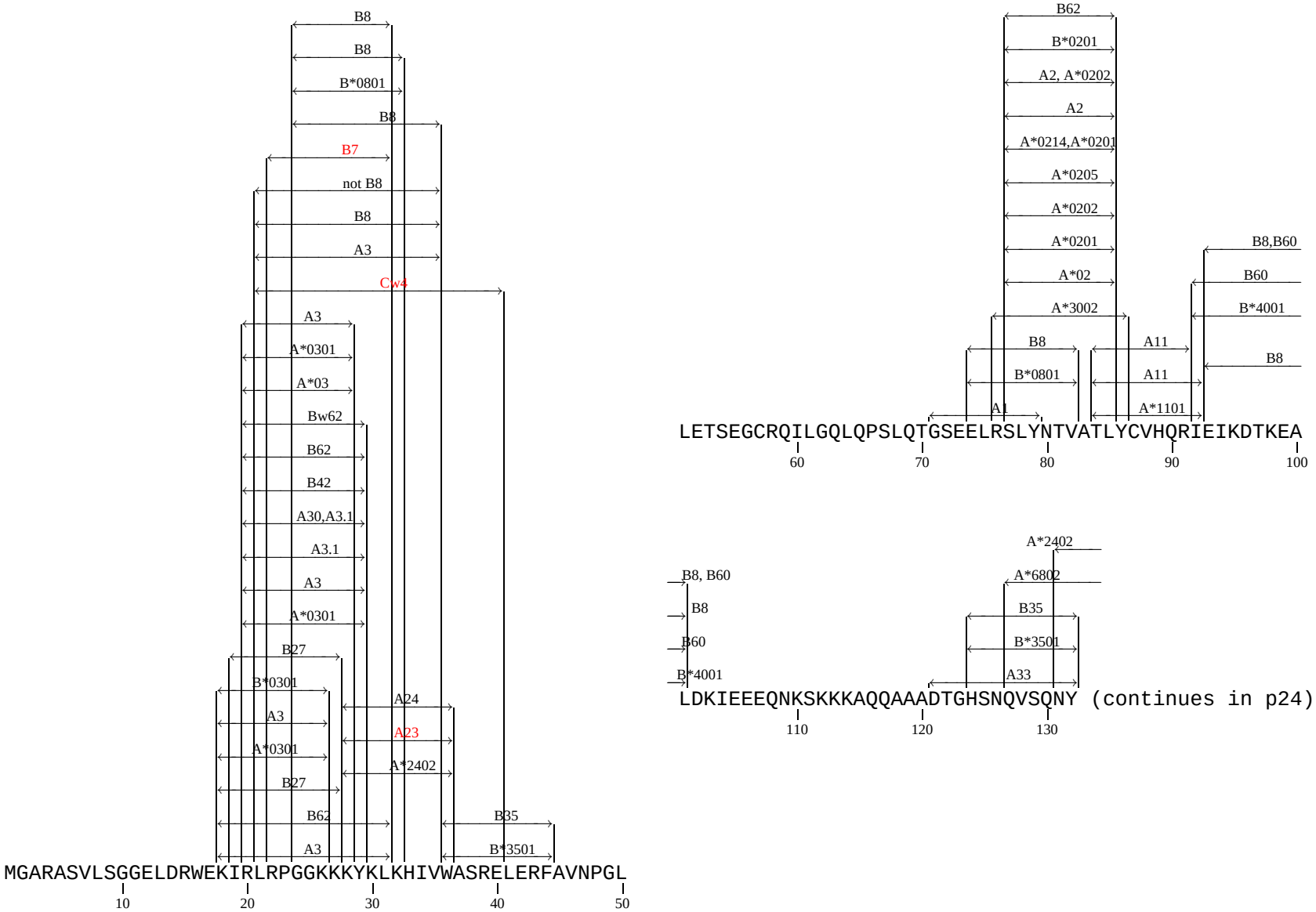
B8
B8
B*0801
B8
B7
not B8
B8
A3
Cw4
A3
A*0301
A*03
Bw62
B62
B42
A30,A3.1
A3.1
A3
A*0301
B27
B*0301
A3
A*0301
B27
B62
A3
A24
A23
A*2402
B35
B*3501
MGARASVLSGGELDRWEKIRLRPGGKKKYKLKHIVWASRELERFAVNPGL
10
20
30
40
50
B62
B*0201
A2, A*0202
A2
A*0214,A*0201
A*0205
A*0202
A*0201
A*02
A*3002
B8
B*0801
A1
A11
A11
A*1101
B8,B60
B60
B*4001
B8
LETSEGCRQILGQLQPSLQTGSEELRSLYNTVATLYCVHQRIEIKDTKEA
60
70
80
90
100
A*2402
B8, B60
A*6802
B8
B35
B60
B*3501
B*4001
A33
LDKIEEEQNKSKKKAQQAAADTGHSNQVSQNY (continues in p24)
110
120
130

p24 CTL Map

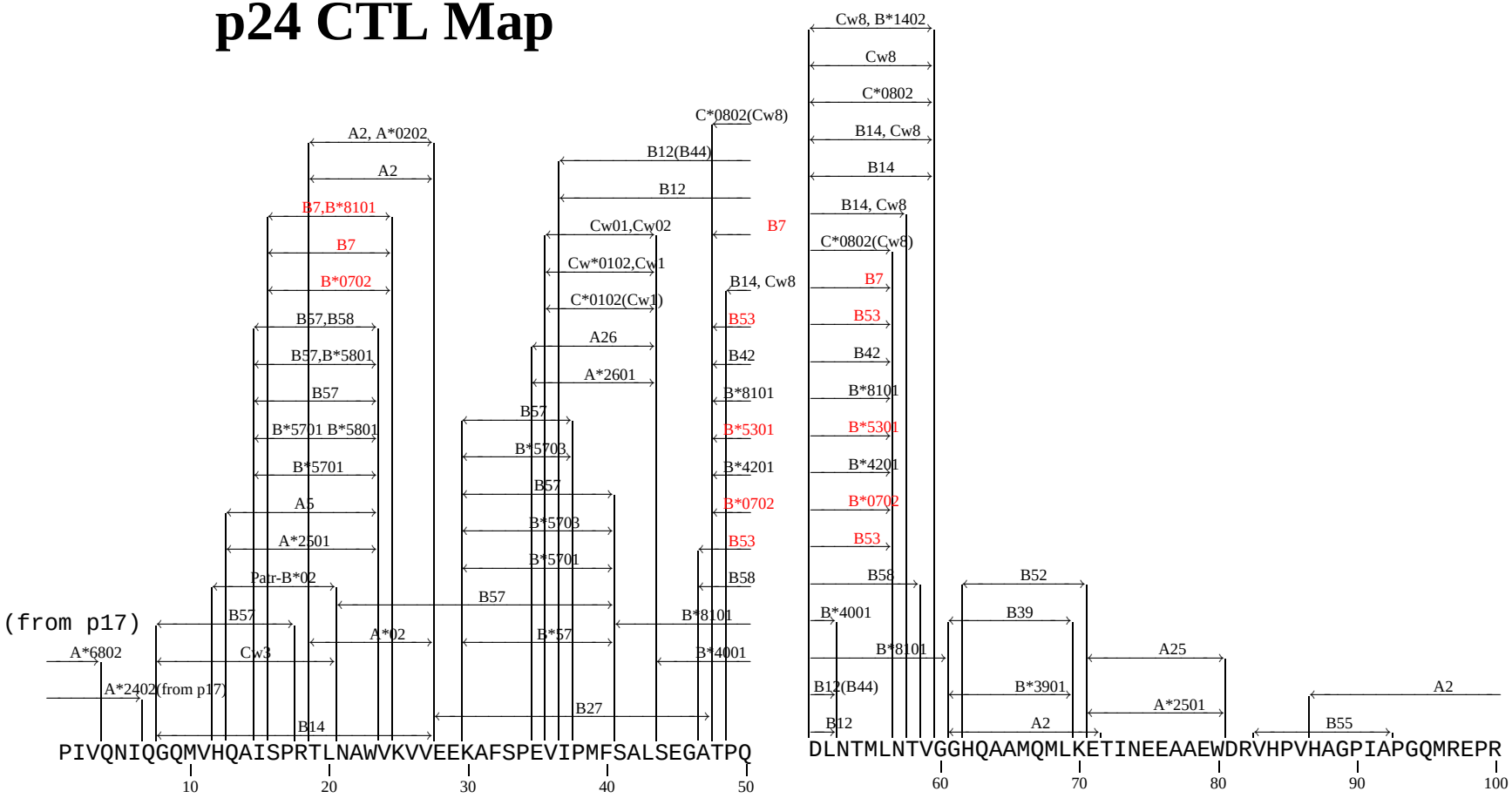
(from p17)
A*6802
A*2402(from p17)
Pair-B*02
B57
Cw3
B14
A5
A*2501
B57,B58
B57,B*5801
B57
B*5701 B*5801
B*5701
B7,B*8101
B7
B*0702
A2, A*0202
A2
A*02
B57
B*5703
B57
B*5703
B57
B*5701
B57
Cw01,Cw02
Cw*0102,Cw1
C*0102(Cw1)
A26
A*2601
B12(B44)
B12
B27
C*0802(Cw8)
B7
B14, Cw8
B53
B42
B*8101
B*5301
B*4201
B*0702
B53
B58
B*8101
B*4001
PIVQNIQGQMVHQAISPRTLNAWVKVVEEKAFSPEVIPMFSALSEGATPQ
10
20
30
40
50
Cw8, B*1402
Cw8
C*0802
B14, Cw8
B14
B14, Cw8
C*0802(Cw8)
B7
B53
B42
B*8101
B*5301
B*4201
B*0702
B53
B58
B*4001
B*8101
B12(B44)
B12
B52
B39
B*3901
A2
A25
A*2501
A2
B55
DLNTMLNTVGGHQAAMQMLKETINEEAAEWDRVHPVHAGPIAPGQMREPR
60
70
80
90
100

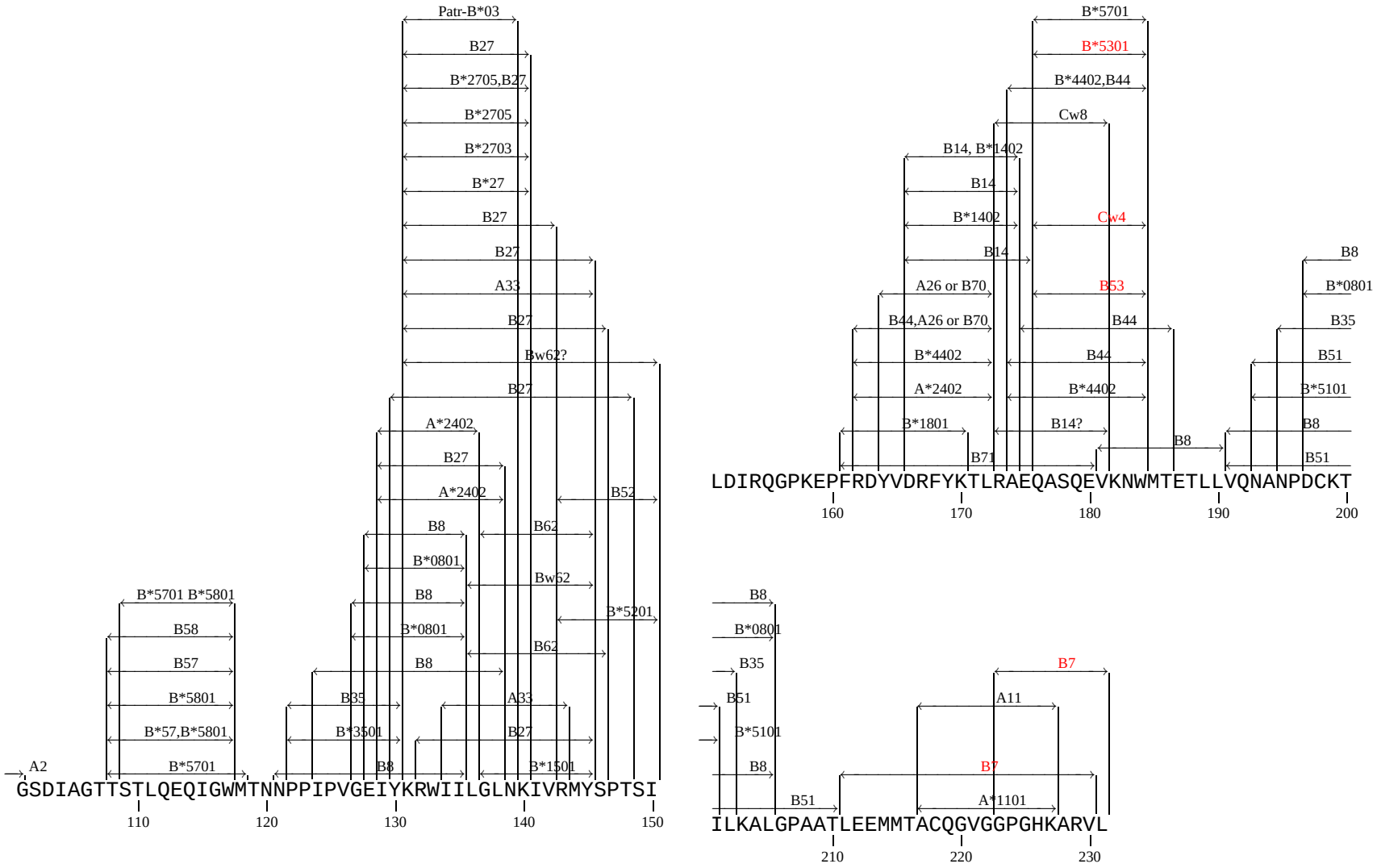
Patr-B*03
B27
B*2705,B27
B*2705
B*2703
B*27
B27
B27
A33
B27
Bw62?
B27
A*2402
B27
A*2402
B52
B8
B62
B*0801
Bw62
B8
B*5201
B*0801
B62
B8
B35
A33
B*3501
B27
B8
B*1501
B*5701 B*5801
B58
B57
B*5801
B*57,B*5801
A2
B*5701
GSDIAGTTSTLQEQIGWMTNNPPIPVGEIYKRWIILGLNKIVRMYSPTSI
110
120
130
140
150
B*5701
B*5301
B*4402,B44
Cw8
B14, B*1402
B14
B*1402
Cw4
B14
A26 or B70
B53
B44,A26 or B70
B44
B*4402
B44
A*2402
B*4402
B*1801
B14?
B71
B8
B8
B*0801
B35
B51
B*5101
B8
B51
LDIRQGPKEPFRDYVDRFYKTLRAEQASQEVKNWMTETLLVQNANPDCKT
160
170
180
190
200
B8
B*0801
B35
B51
B*5101
B8
B51
B7
A11
B7
A*1101
ILKALGPAATLEEMMTACQGVGGPGHKARVL
210
220
230

p2p7p1p6 CTL Map

```
    AEAMSQVTNSATIMMQRGNFRNQRKIVKCFNCGKEGHTARNCRAPRKKGC
              |         |         |         |         |
             10        20        30        40        50

 p2 <-            <>
start      p2 end  p7 start

        A2                        A2
    WKCGKEGHQMKDCTERQANFLGKIWPSYKGRPGNFLQSRPEPTAPPEESF
              |         |         |         |         |
             60        70        80        90       100

                  <>                  <>
             p7 end  p1 start    p1  p6 start
                                end

                         B7
    RSGVETTTPPQKQEPIDKELYPLTSLRSLFGNDPSSQ
              |         |         |
            110       120       130
                                p6 end ->
```

Protease CTL Map

```
A*7401
A*6802,A*7401,A19
A*6802                                  A*6802
PQVTLWQRPLVTIKIGGQLKEALLDTGADDTVLEEMSLPGRWKPKMIGGI
          |         |         |         |         |
         10        20        30        40        50

                                   A*0201
GGFIKVRQYDQILIEICGHKAIGTVLVGPTPVNIIGRNLLTQIGCTLNF
          |         |         |         |
         60        70        80        90
```

RT CTL Map

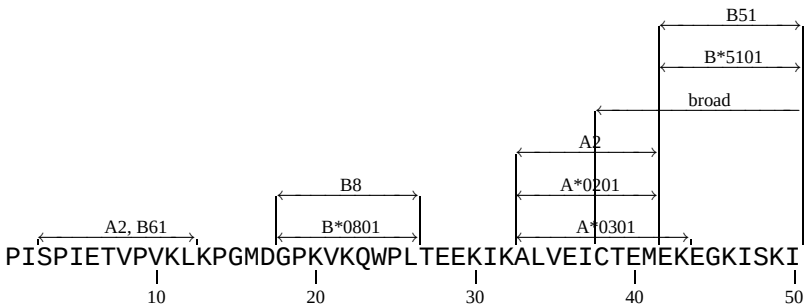
B51
B*5101
broad
A2
B8
A*0201
A2, B61
B*0801
A*0301
PISPIETVPVKLKPGMDGPKVKQWPLTEEKIKALVEICTEMEKEGKISKI
10
20
30
40
50

Cw4
broad
A3
GPENPYNTPVFAIKKKDSTKWRKLVDFRELNKRTQDFWEVQLGIPHPAGL
60
70
80
90
100

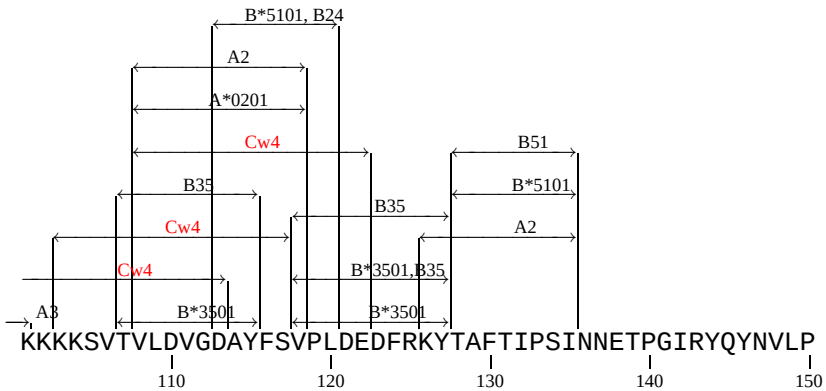
B*5101, B24
A2
A*0201
Cw4
B51
B35
B*5101
B35
Cw4
A2
Cw4
B*3501,B35
A3
B*3501
B*3501
KKKKSVTVLDVGDAYFSVPLDEDFRKYTAFTIPSINNETPGIRYQYNVLP
110
120
130
140
150

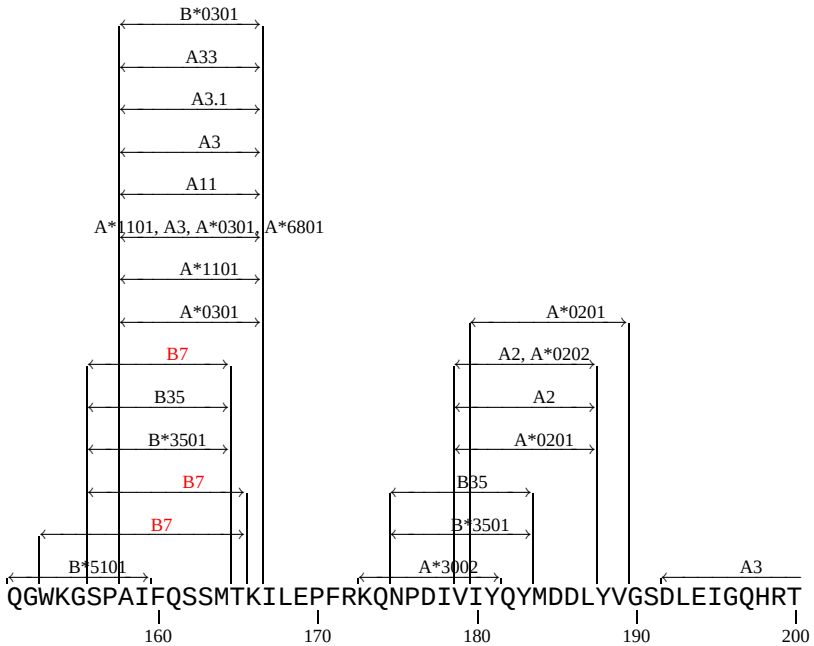
B*0301
A33
A3.1
A3
A11
A*1101, A3, A*0301, A*6801
A*1101
A*0301
A*0201
B7
A2, A*0202
B35
A2
B*3501
A*0201
B7
B35
B7
B*3501
B*5101
A*3002
A3
QGWKGSPAIFQSSMTKILEPFRKQNPDIVIYQYMDDLYVGSDLEIGQHRT
160
170
180
190
200

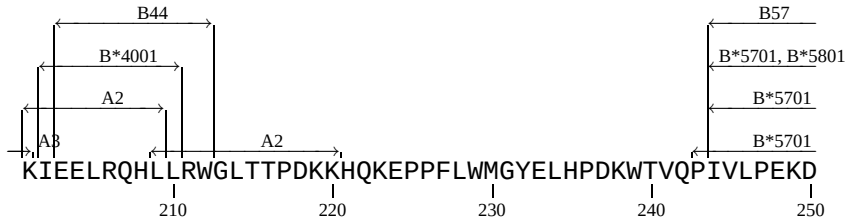
B44
B57
B*4001
B*5701, B*5801
A2
B*5701
A3
A2
B*5701
KIEELRQHLLRWGLTTPDKKHQKEPPFLWMGYELHPDKWTVQPIVLPEKD
210
220
230
240
250

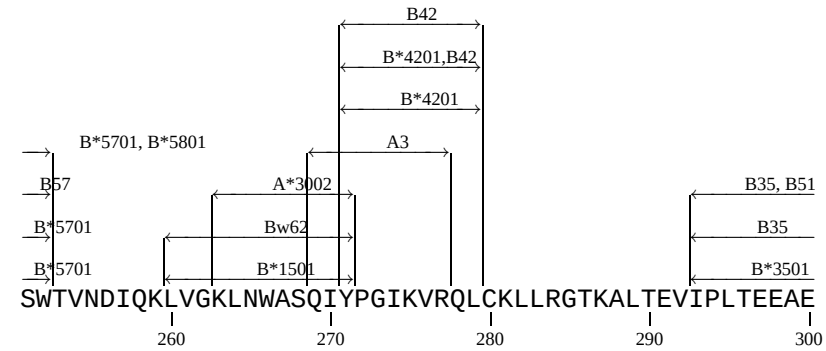

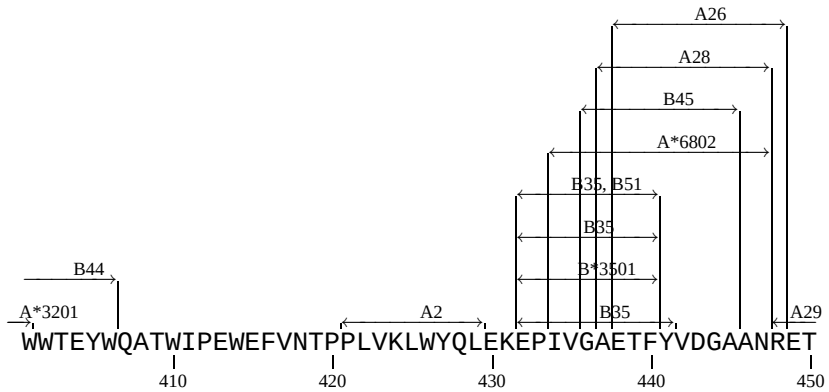

p15 RNase start <-

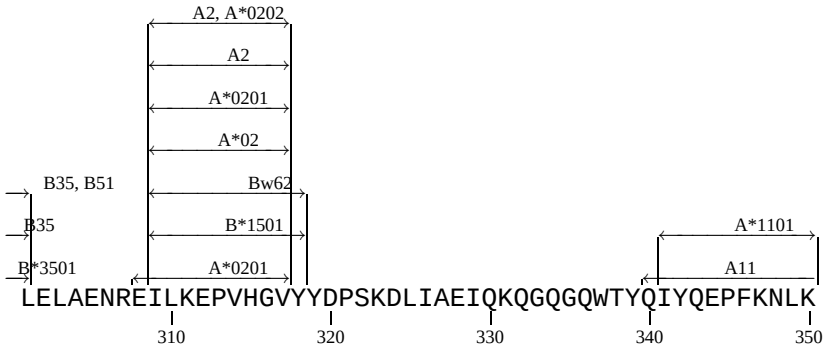

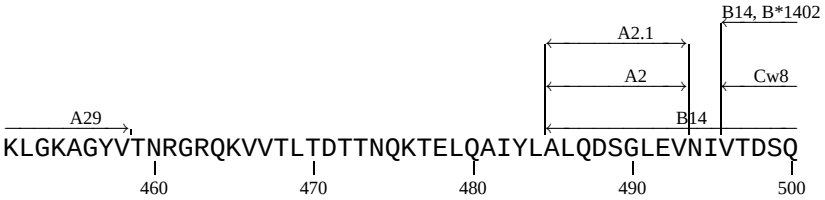

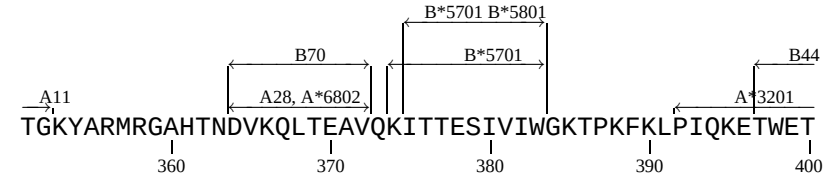

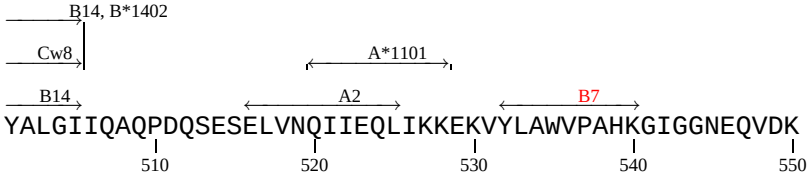

LVSAGIRKVL

-> p15 RNase end

Integrase CTL Map

B*5101

FLDGIDKAQDEHEKYHSNWRAMASDFNLPPVVAKEIVASCDKCQLKGEAM

10 20 30 40 50

A*2402 A*6802

HGQVDCSPGIWQLDCTHLEGKVILVAVHVASGYIEAEVIPAETGQETAYF

60 70 80 90 100

A*6802

LLKLAGRWPVKTIHTDNGSNFTGATVRAACWWAGIKQEFGIPYNPQSQGV

110 120 130 140 150

A*1101

B57

B*5701

VESMNKELKKIIGQVRDQAEHLKTAVQMAVFIHNFKRKGGIGGYSAGERI

160 170 180 190 200

A2

A*0201

VDIIATDIQTKELQKQITKIQNFRVYYRDSRNPLWKGPAKLLWKGEGAVV

210 220 230 240 250

IQDNSDIKVVPRRKAKIIRDYGKQMAGDDCVASRQDED

260 270 280

Rev CTL Map

B*5801

B*5701

MAGRSGDSDEELIRTVRLIKLLYQSNPPPNPEGTRQARRNRRRRWRERQR

10 20 30 40 50

Cw5

B14, Cw8

A1

B14

QIHSISERILGTYLGRSAEPVPLQLPPLERLTLDCNEDCGTSGTQGVGSP

60 70 80 90 100

QILVESPTVLESGTKE

110

gp160 CTL Map

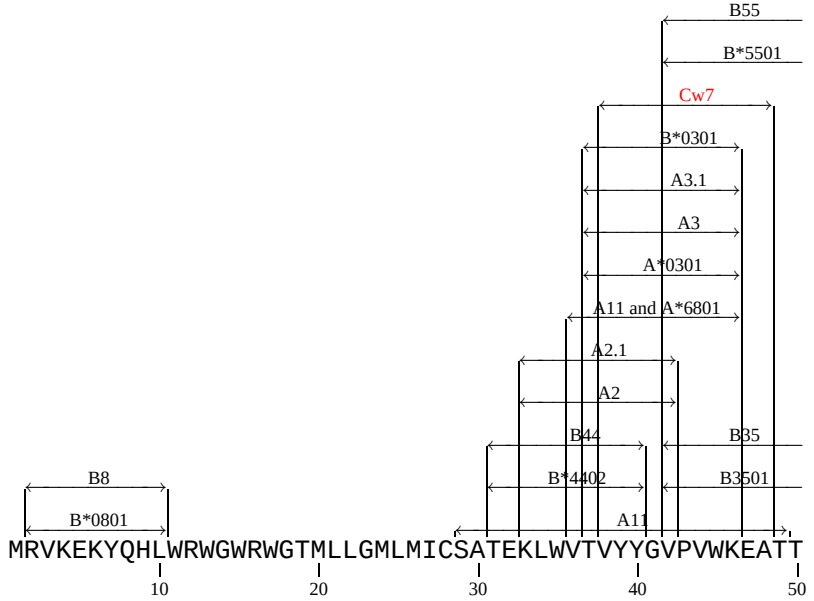

<- gp120 start

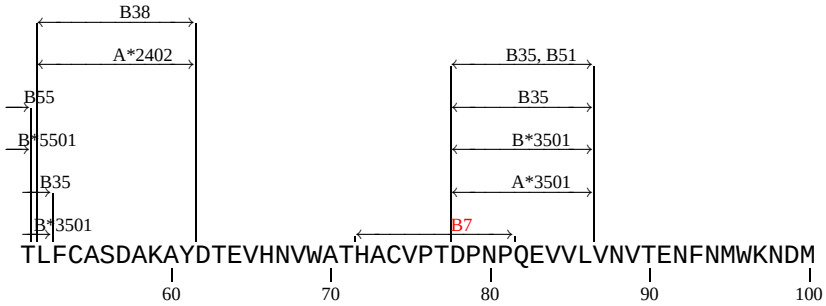

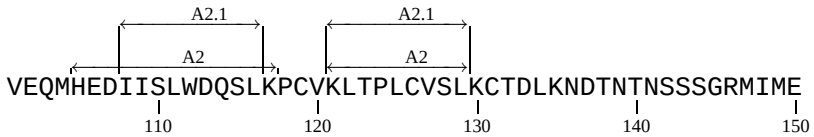

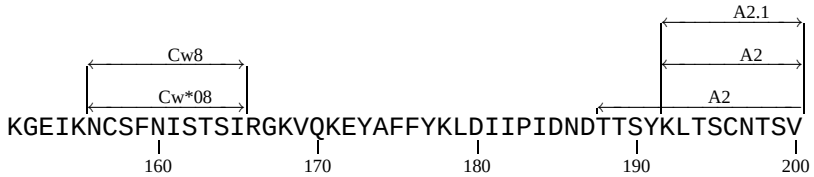

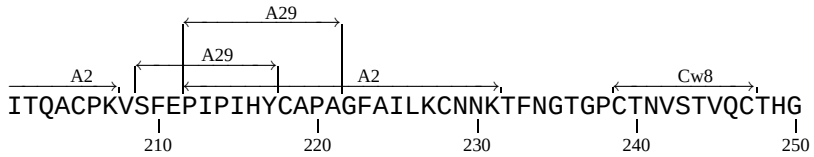

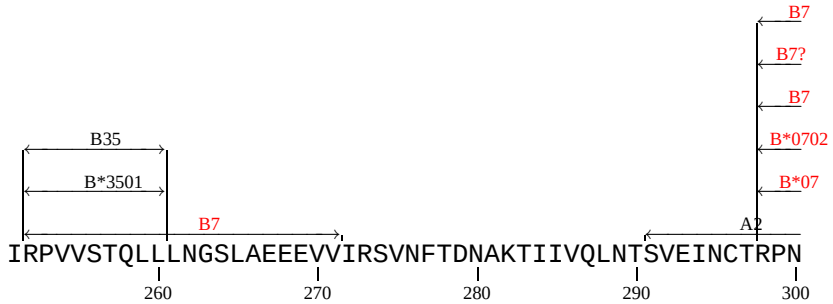

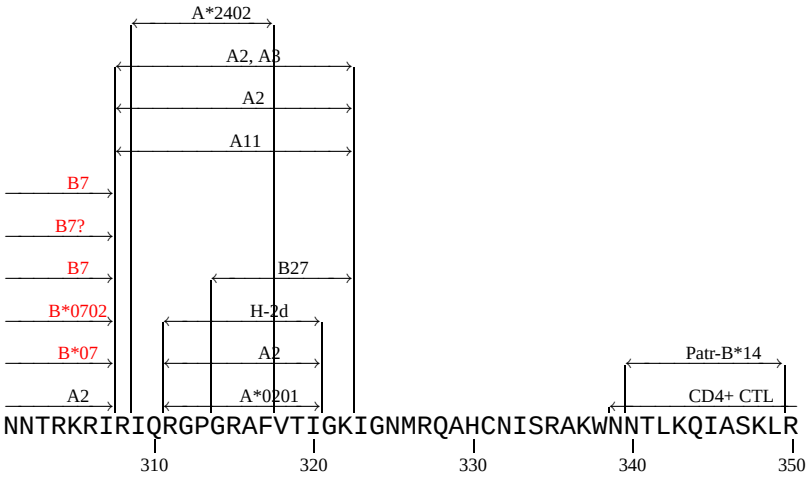

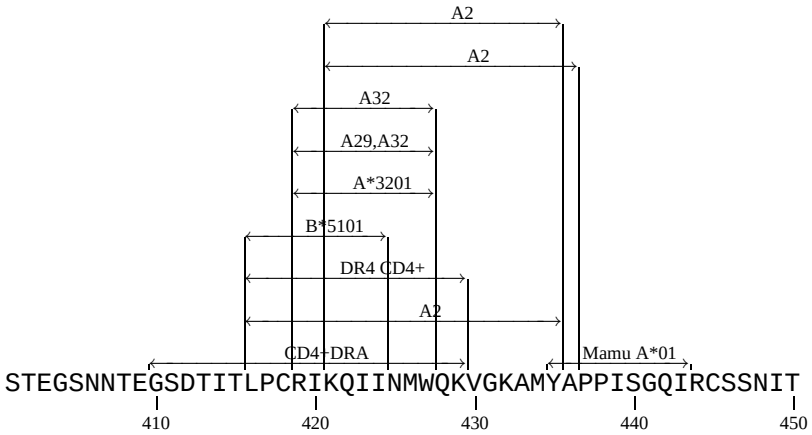

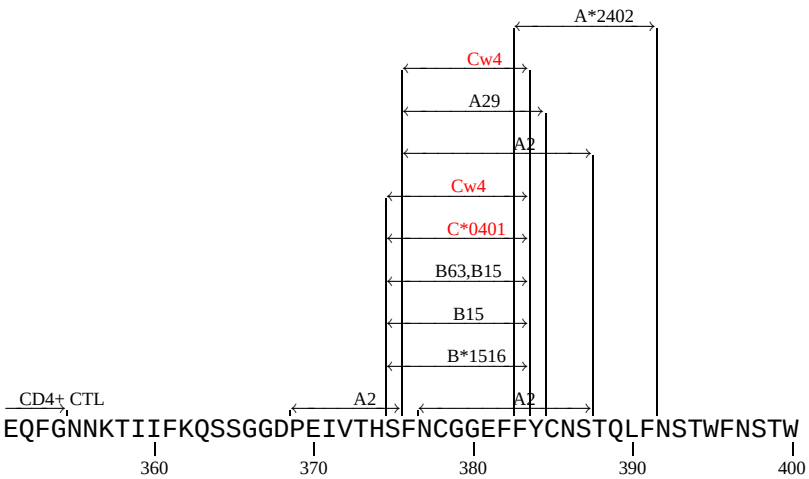

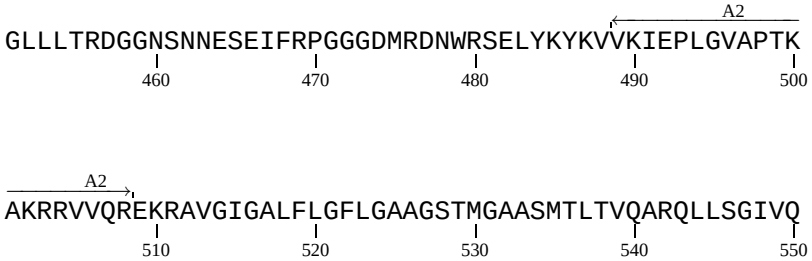

gp120 end <> gp41 start

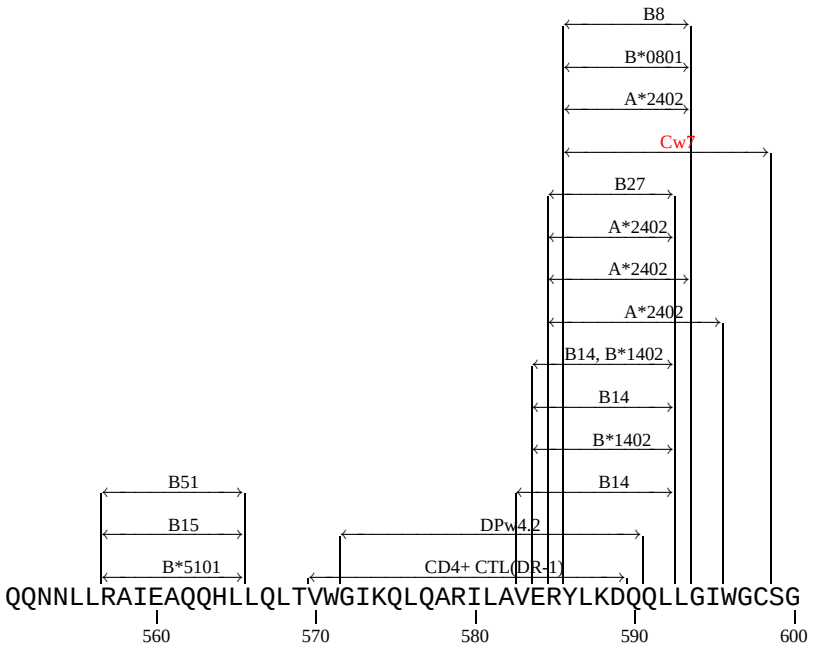
B8
B*0801
A*2402
Cw7
B27
A*2402
A*2402
A*2402
B14, B*1402
B14
B*1402
B14
B51
B15
B*5101
DPw4.2
CD4+ CTL(DR-1)
QQNNLLRAIEAQQHLLQLTVWGIKQLQARILAVERYLKDQQLLGIWGCSG
560
570
580
590
600

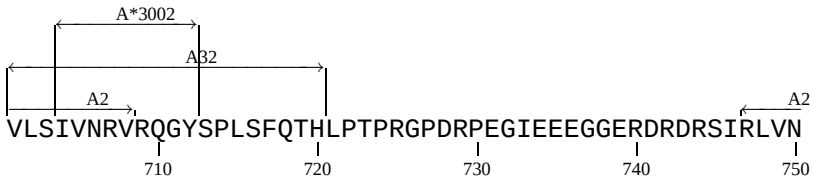
A*3002
A32
A2
A2
VLSIVNRVRQGYSPLSFQTHLPTPRGPDRPEGIEEEGGERDRDRSIRLVN
710
720
730
740
750

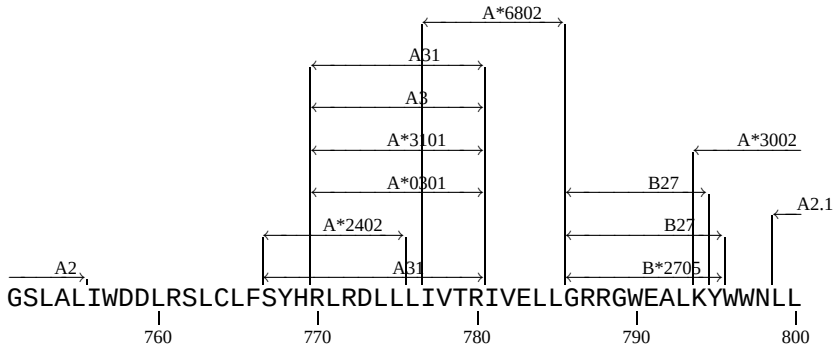
A*6802
A31
A3
A*3101
A*0301
A*2402
A31
A*3002
B27
B27
B*2705
A2.1
A2
GSLALIWDDLRSLCLFSYHRLRDLLLIVTRIVELLGRRGWEALKYWWNLL
760
770
780
790
800

B35
B*3501
KLICTTAVPWNASWSNKSLEQIWNHTTWMEWDREINNYTSLIHSLIEESQ
610
620
630
640
650

A2.1
A*2402
A2.1
A2
NQQEKNEQELLELDKWASLWNWFNITNWLWYIKLFIMIVGGLVGLRIVFA
660
670
680
690
700

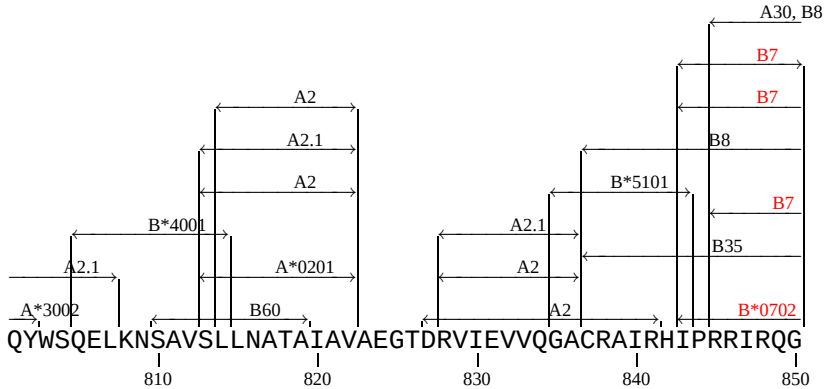
A30, B8
B7
B7
A2
A2.1
B8
A2
B*5101
B7
B*4001
A2.1
B35
A2.1
A*0201
A2
A*3002
B60
A2
B*0702
QYWSQELKNSAVSLLNATAIAVAEGTDRVIEVVQGACRAIRHIPRRIRQG
810
820
830
840
850

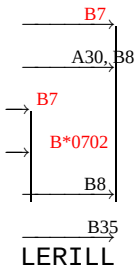
B7
A30, B8
B7
B*0702
B8
B35
LERILL
-> gp41 end

Nef CTL Map

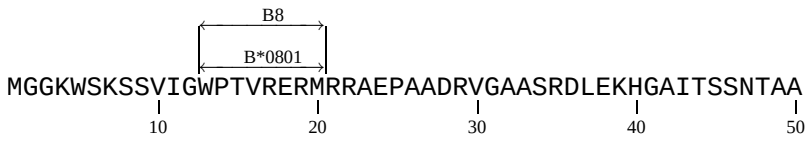
B8
B*0801
MGGKWSKSSVIGWPTVRERMRRAEPAADRVGAASRDLEKHGAITSSNTAA
10
20
30
40
50

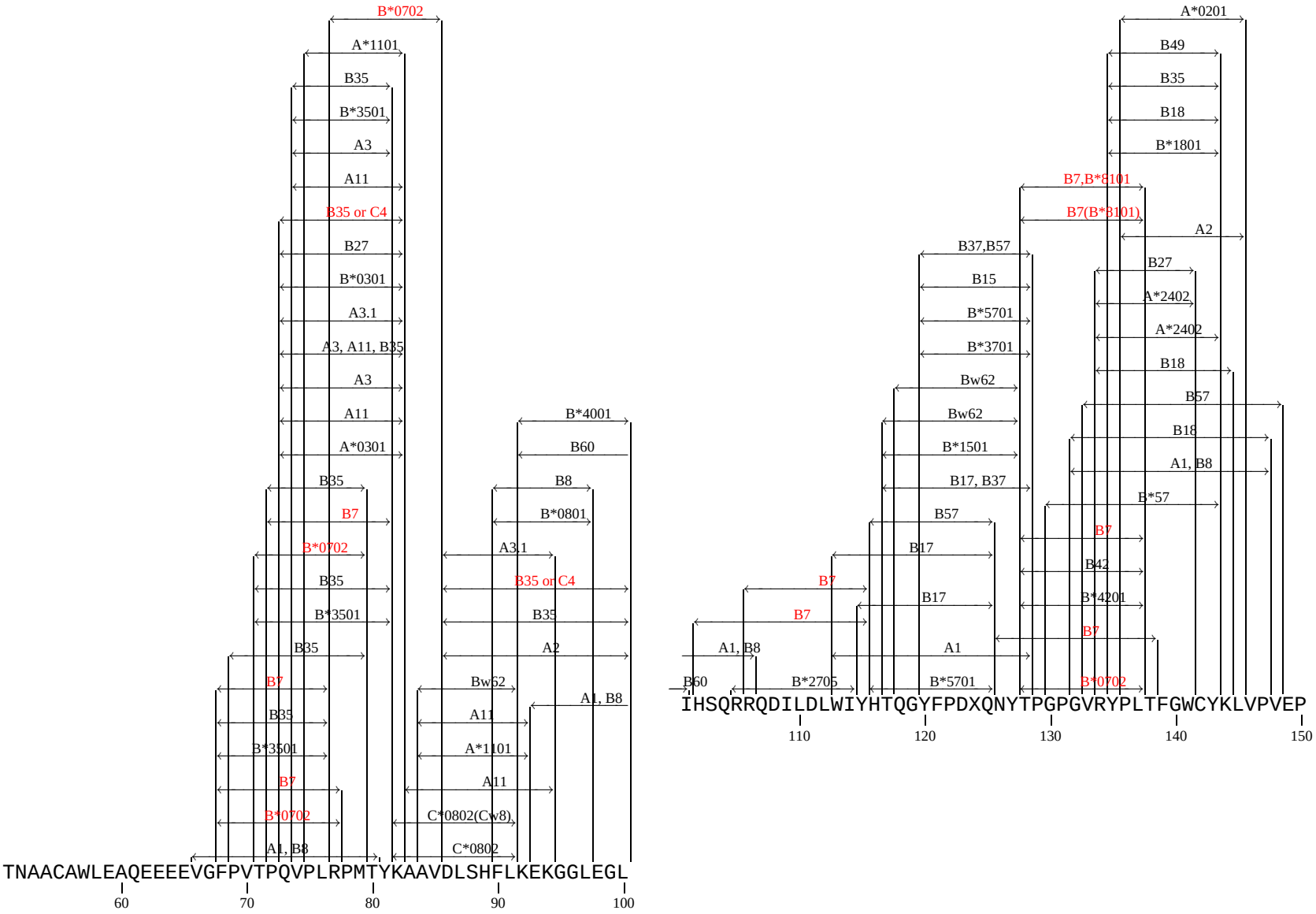
B*0702
A*1101
B35
B*3501
A3
A11
B35 or C4
B27
B*0301
A3.1
A3, A11, B35
A3
A11
A*0301
B35
B7
B*0702
B35
B*3501
B35
B7
B35
B*3501
B7
B*0702
A1, B8
B*4001
B60
B8
B*0801
A3.1
B35 or C4
B35
A2
Bw62
A1, B8
A11
A*1101
A11
C*0802(Cw8)
C*0802
TNAACAWLEAQEEEEVGFPVTPQVPLRPMTYKAAVDLSHFLKEKGGLEGL
60
70
80
90
100
A*0201
B49
B35
B18
B*1801
B7,B*8101
B7(B*8101)
A2
B37,B57
B27
B15
A*2402
B*5701
A*2402
B*3701
B18
Bw62
B57
Bw62
B18
B*1501
A1, B8
B17, B37
B*57
B57
B7
B17
B42
B7
B17
B*4201
B7
B7
A1, B8
A1
B60
B*2705
B*5701
B*0702
IHSQRRQDILDLWIYHTQGYFPDXQNYTPGPGVRYPLTFGWCYKLVPVEP
110
120
130
140
150

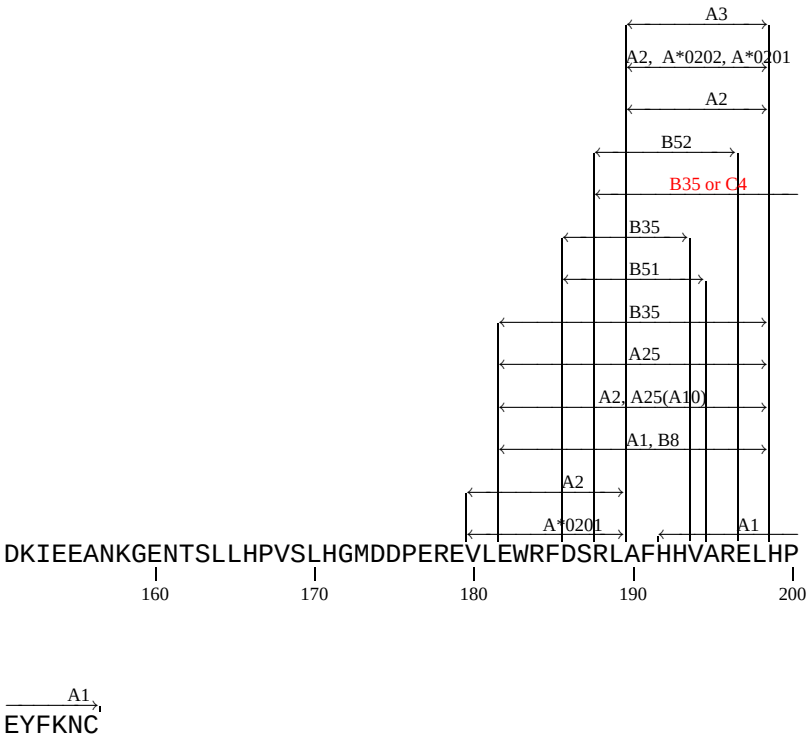

[Bauer (1997)] M. Bauer, M. Lucchiari-Hartz, R. Maier, G. Haas, B. Autran, K. Eichmann, R. Frank, B. Maier, & A. Meyerhans. Structural constraints of HIV-1 Nef may curtail escape from HLA-B7-restricted CTL recognition. *Immunol Lett* **55**:119–22, 1997. (Medline: 97289021).

[Brander & Goulder(2001)] C. Brander & P. Goulder. The evolving £eld of HIV CTL epitope mapping: New approaches to the identi£cation of novel epitopes. *HIV Molecular Immunology Database* pages IV–1, 2001. Notes: This review article in the annual HIV Molecular Immunology Compendium presents the table of Optimal CTL Epitopes that has been curated by Brander and others for several years.

[Brander & Walker(1995)] C. Brander & B. Walker. The HLA-class I restricted CTL Response in HIV-1 Infection: Identi£cation of optimal epitopes. *HIV Molecular Immunology Database* pages IV–1 to IV–9, 1995.

[Buseyne (1993)] F. Buseyne, S. Blanche, D. Schmitt, C. Griscelli and, & Y. Riviere. Detection of HIV-speci£c cell-mediated cytotoxicity in the peripheral blood from infected children. *J. Immunol.* **150**:3569–3581, 1993. (Medline: 93224764).

[Culmann(1998)] B. Culmann. 1998. Notes: Personal communication.

[Culmann (1991)] B. Culmann, E. Gomard, M.-P. Kieny, B. Guy, F. Dreyfus, A.-D. Saimot, D. Sereni, D. Sicard, & J.-P. Levy. Six epitopes with human cytotoxic CD8+ cells in the central region of the HIV-1 Nef protein. *J Immunol* **146**:1560–1565, 1991. (Medline: 91132023) Notes: Nef-speci£c CTL were generated from six seropositive donors. Six epitopes were de£ned, all localized to two regions in the central part of Nef. Some epitopes could be recognized in the contexts of several HLA class I molecules. Peptides were based on BRU epitopes: QVPLRPMTYK, HLA A3, A11, B35; AAVDLSHFLKEK, HLA A11; HTQGYFPQWQ, HLA B17;TQGYFPQWQNYT, HLA B17, B37, NYTPGPGVRYPLT, HLA B7; and GVRYPLTFGWCYKLVP, HLA B18).

[Ferris (1999)] R. L. Ferris, C. Hall, N. V. Sipsas, J. T. Safrit, A. Trocha, R. A. Koup, R. P. Johnson, & R. F. Siliciano. Processing of HIV-1 envelope glycoprotein for class I-restricted recognition: dependence on TAP1/2 and mechanisms for cytosolic localization. *J Immunol* **162**:1324–32, 1999. (Medline: 99138809).

[Gotch (1993)] F. Gotch, S. N. McAdam, & C. E. Allsopp et al. Cytotoxic T cells in HIV-2 seropositive Gambians. Identi£cation of a virus-speci£c MHC-restricted peptide epitope. *J Immunol* **151**:3361–3369, 1993. (Medline: 93389165).

[Goulder (2000)] P. J. Goulder, C. Brander, K. Annamalai, N. Mngqundaniso, U. Govender, Y. Tang, S. He, K. E. Hartman, C. A. O'Callaghan, G. S. Ogg, M. A. Altfeld, E. S. Rosenberg, H. Cao, S. A. Kalams, M. Hammond, M. Bunce, S. I. Pelton, S. A. Burchett, K. McIntosh, H. M. Coovadia, &

B. D. Walker. Differential narrow focusing of immunodominant human immunode£ciency virus gag-speci£c cytotoxic T-lymphocyte responses in infected African and caucasoid adults and children. *J Virol* **74**:5679–90, 2000. (Medline: 20283828).

[Haas (1997)] G. Haas, A. Hosmalin, F. Hadida, J. Duntze, P. Debre, & B. Autran. Dynamics of HIV variants and speci£c cytotoxic T cell recognition in nonprogressors and progressors. *Immunol Lett* **57**:63–8, 1997. (Medline: 97376317).

[Haas (1996)] G. Haas, U. Plikat, P. Debre, M. Lucchiari, C. Katlama, Y. Dudoit, O. Bonduelle, M. Bauer, H. Ihlenfeldt, G. Jung, B. Maier, A. Meyerhans, & B. Autran. Dynamics of viral variants in HIV-1 Nef and speci£c cytotoxic T lymphocytes in vivo. *J Immunol* **157**:4212–4221, 1996. (Medline: 97047818).

[Hammond (1995)] S. A. Hammond, R. P. Johnson, S. A. Kalams, B. D. Walker, M. Takiguchi, J. T. Safrit, R. A. Koup, & R. F. Siliciano. An epitope-selective transporter associated with antigen presentation TAP-1/2-independent pathway and a more general TAP-1/2-dependent antigen-processing pathway allow recognition of the HIV-1 envelope glycoprotein by CD8+ CTL. *J Immunol* **154**:6140–6156, 1995. (Medline: 95271010) Notes: Two peptide-processing pathways are utilized for MHC class I presentation of HIV-1 Env epitopes. The previously characterized TAP-1 and TAP-2 dependent pathway can generate all Env epitopes and uses Env protein mislocalized in the cytosol to produce peptides. The second, novel pathway uses a TAP-1/2 independent pathway, and allows a subset of MHC-restricted epitopes to be processed in the endoplasmic reticulum or a Golgi compartment.

[Jin (2000)] X. Jin, C. G. Roberts, D. F. Nixon, J. T. Safrit, L. Q. Zhang, Y. X. Huang, N. Bhardwaj, B. Jesdale, A. S. DeGroot, & R. A. Koup. Identi£cation of subdominant cytotoxic T lymphocyte epitopes encoded by autologous HIV type 1 sequences, using dendritic cell stimulation and computer-driven algorithm. *AIDS Res Hum Retroviruses* **16**:67–76, 2000. (Medline: 20092440).

[Kaul (2000)] R. Kaul, F. A. Plummer, J. Kimani, T. Dong, P. Kiama, T. Rostron, E. Njagi, K. S. MacDonald, J. J. Bwayo, A. J. McMichael, & S. L. Rowland-Jones. HIV-1-speci£c mucosal CD8+ lymphocyte responses in the cervix of HIV-1- resistant prostitutes in Nairobi. *J Immunol* **164**:1602–11, 2000. (Medline: 20109119).

[Lieberman (1997)] J. Lieberman, J. A. Fabry, D. M. Fong, & G. R. Parkerson 3rd. Recognition of a small number of diverse epitopes dominates the cytotoxic T lymphocytes response to HIV type 1 in an infected individual. *AIDS Res Hum Retroviruses* **13**:383–92, 1997. (Medline: 97229916).

[Rowland-Jones (1998a)] S. Rowland-Jones, T. Dong, P. Krausa, J. Sutton, H. Newell, K. Ariyoshi, F. Gotch, S. Sabally, T. Corrah, J. Kimani, K. MacDonald, F. Plummer, J. Ndinya-Achola, H. Whittle, & A. McMichael. The role of cytotoxic T cells in HIV infection. *Dev Biol Stand* **92**:209–14, 1998a. (Medline: 98214896) Notes: In this paper CTL response to previously de£ned conserved epitopes was found in exposed but uninfected prostitutes in Nairobi. Subtypes A and D are circulating in this regions, and the reactive epitopes tended to be conserved. Similarly previous studies in the Gambia showed that exposed but uninfected prostitutes tended to have B35 presented CTL epitopes conserved between HIV-1 and HIV-2. It was suggested that what was special about B35 is simply that it presents epitopes found both in HIV-1 and HIV-2.

[Rowland-Jones (1999)] S. L. Rowland-Jones, T. Dong, L. Dorrell, G. Ogg, P. Hansasuta, P. Krausa, J. Kimani, S. Sabally, K. Ariyoshi, J. Oyugi, K. S. MacDonald, J. Bwayo, H. Whittle, F. A. Plummer, & A. J. McMichael. Broadly cross-reactive HIV-speci£c cytotoxic T lymphocytes in highly-exposed persistently seronegative donors. *Immunol Lett* **66**:9–14, 1999. (Medline: 99217678).

[Rowland-Jones (1998b)] S. L. Rowland-Jones, T. Dong, K. R. Fowke, J. Kimani, P. Krausa, H. Newell, T. Blanchard, K. Ariyoshi, J. Oyugi, E. Ngugi, J. Bwayo, K. S. MacDonald, A. J. McMichael, & F. A. Plummer. Cytotoxic T cell responses to multiple conserved HIV epitopes in HIV- resistant prostitutes in Nairobi [see comments]. *J Clin Invest* **102**:1758–65, 1998b. (Medline: 99021675).

[Safrit (1994)] J. T. Safrit, A. Y. Lee, C. A. Andrews, & R. A. Koup. A region of the third variable loop of HIV-1 gp120 is recognized by HLA-B7-restricted CTLs from two acute seroconversion patients. *J Immunol* **153**:3822–3830, 1994. (Medline: 95015873) Notes: HIV-1 envelope-speci£c CTL clones were isolated from the peripheral blood of two patients within weeks of seroconversion. These clones were CD8+ and restricted by the HLA-B7 molecule. The minimum epitope was de£ned, RPNNNTRKSI, with anchor residues at the proline and isoleucine; the anchor residues are relatively well conserved. A Serine to Arginine change at position 9 of the epitope abrogated clone recognition in one of the patients. This amino acid change is one factor that has been associated with a change from a nonsyncytium-inducing to a syncytium-inducing phenotype of HIV-1.

[Wilson (1996)] C. Wilson, B. Wilkes, D. Ruhl, & B. Walker. Personal communication. 1996. Notes: De£ned in the context of the Pediatric AIDS Foundation ARIEL Project, a mother-infant HIV transmission study. Personal communication.

[Wilson (1999)] C. C. Wilson, W. C. Olson, T. Tuting, C. R. Rinaldo, M. T. Lotze, & W. J. Storkus. HIV-1-speci£c CTL responses primed in vitro by blood-derived dendritic cells and Th1-biasing cytokines. *J Immunol* **162**:3070–8, 1999. (Medline: 99172249).

[Wilson (2000)] J. D. Wilson, G. S. Ogg, R. L. Allen, C. Davis, S. Shaunak, J. Downie, W. Dyer, C. Workman, S. Sullivan, A. J. McMichael, & S. L. Rowland-Jones. Direct visualization of HIV-1-speci£c cytotoxic T

lymphocytes during primary infection. *AIDS* **14**:225–33, 2000. (Medline: 20179241).

[Wilson (1998)] S. E. Wilson, S. L. Pedersen, J. C. Kunich, V. L. Wilkins, D. L. Mann, G. P. Mazzara, J. Tartaglia, C. L. Celum, & H. W. Sheppard. Cross-clade envelope glycoprotein 160-speci£c CD8+ cytotoxic T lymphocyte responses in early HIV type 1 clade B infection. *AIDS Res Hum Retroviruses* **14**:925–37, 1998. (Medline: 98349428).