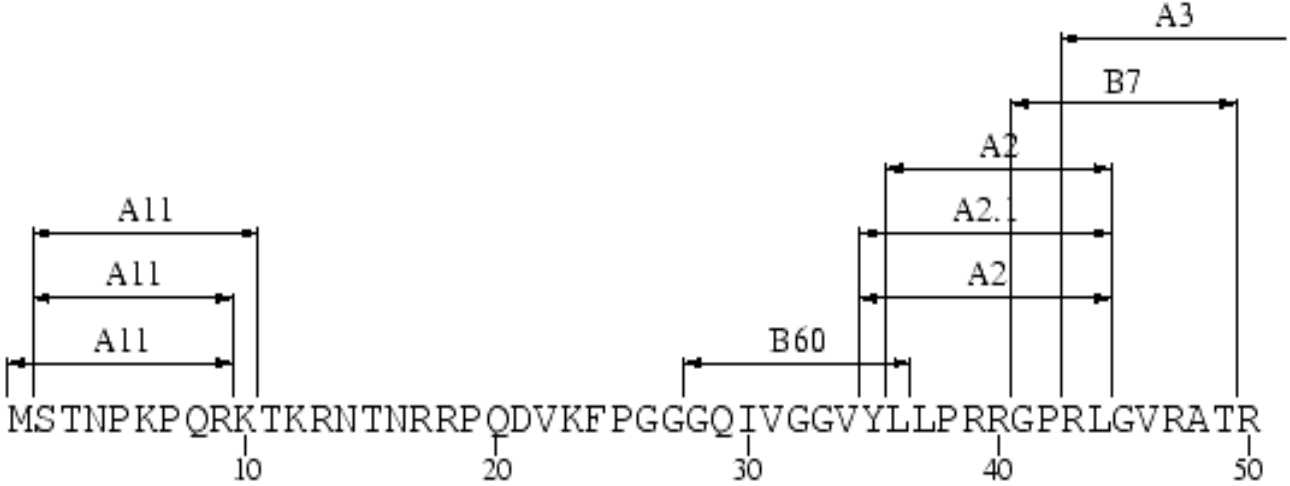
A3
B7
A2
A2.1
A2
A11
A11
A11
B60
MSTNPKPQRKTKRNTNRRPQDVKFPGGGQIVGGVYLLPRRGPRLGVRATR
10
20
30
40
50

A3
A3
A2
B44
KTSERSQPRGRRQPIPKARRPEGRTWAQPGYPWPLYGNEGCGWAGWLLSP
60
70
80
90
100

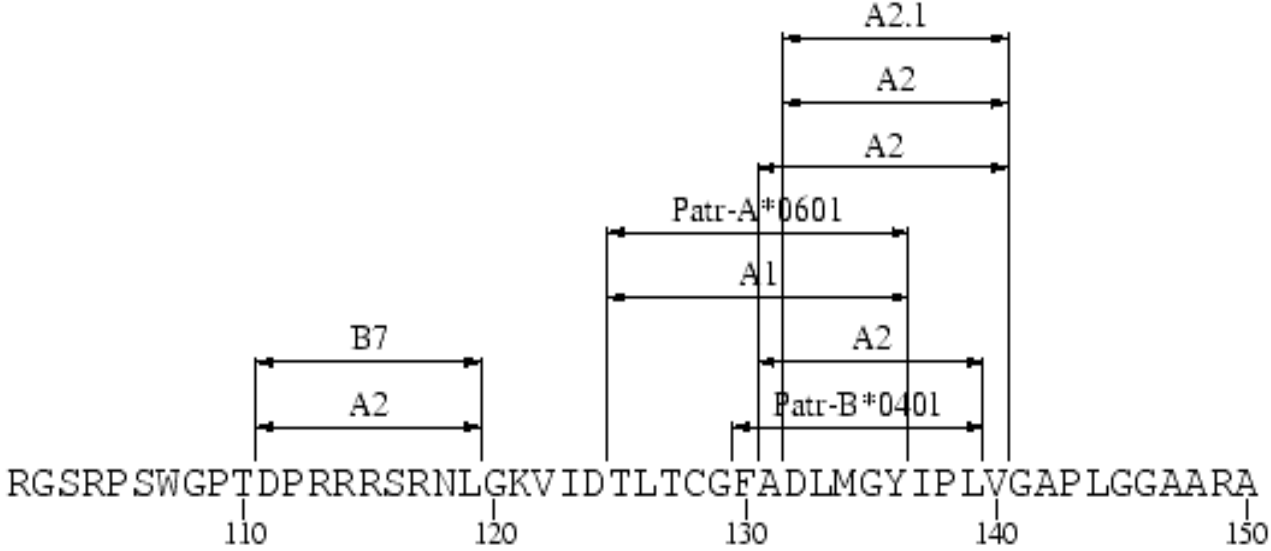
A2.1
A2
A2
Patr-A*0601
A1
B7
A2
A2
Patr-B*0401
RGSRPSWGPTDPRRRSRNLGKVIDTLTCGFADLMGYIPLVGAPLGGAARA
110
120
130
140
150

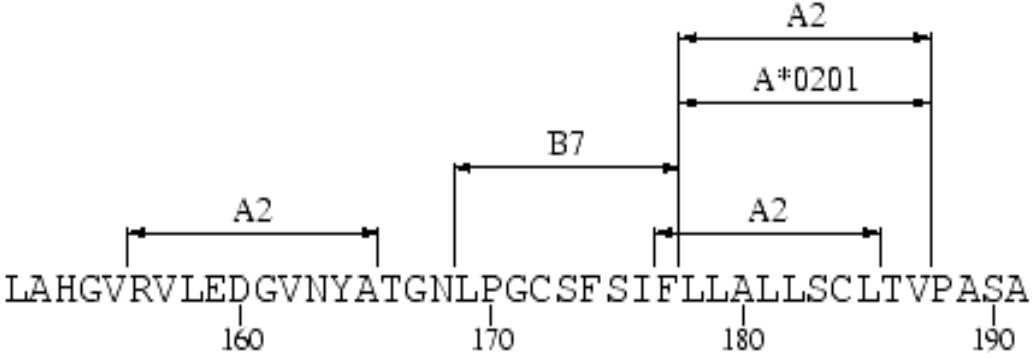
A2
A*0201
B7
A2
A2
LAHGVRVLEDGVNYATGNLPGCSFSIFLLALLSCLTVPASA
160
170
180
190

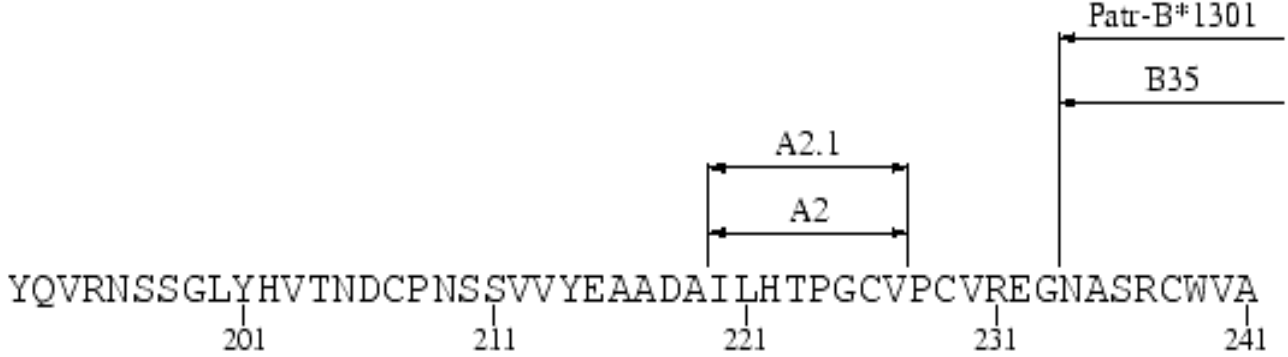
Patr-B*1301
B35
A2.1
A2
YQVRNSSGLYHVTNDCPNSSVVYEAADAILHTPGCVPCVREGNASRCWVA
201
211
221
231
241

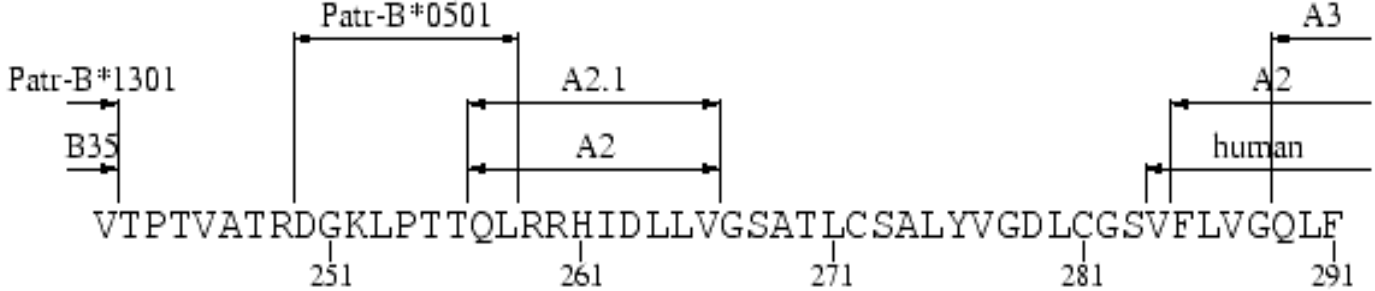
Patr-B*0501
A3
Patr-B*1301
A2.1
A2
B35
A2
human
VTPTVATRDGKLPTTQLRRHIDLLVGSATLCSALYVGDLCGSVFLVGQLF
251
261
271
281
291

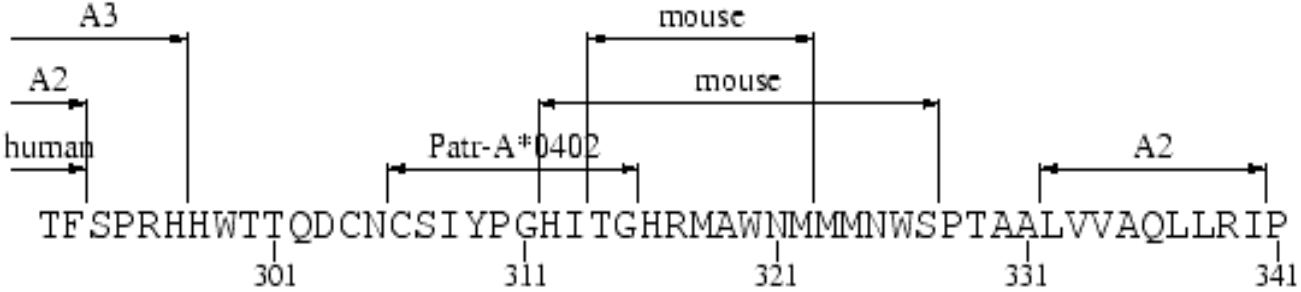
A3
mouse
A2
mouse
human
Patr-A*0402
A2
TFSPRHHWTTQDCNCSIYPGHITGHRMAWNMMMNWSPTAALVVAQLLRIP
301
311
321
331
341

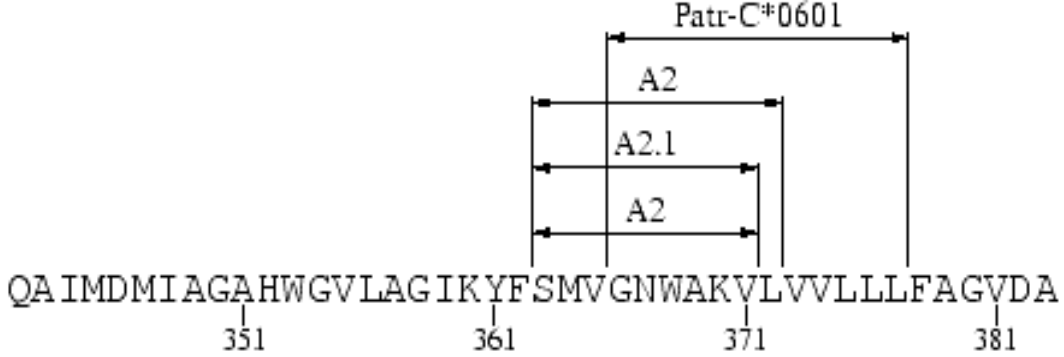
Patr-C*0601
A2
A2.1
A2
QAIMDMIAGAHWGVLAGIKYFSMVGNWAKVLVVLLLFAGVDA
351
361
371
381

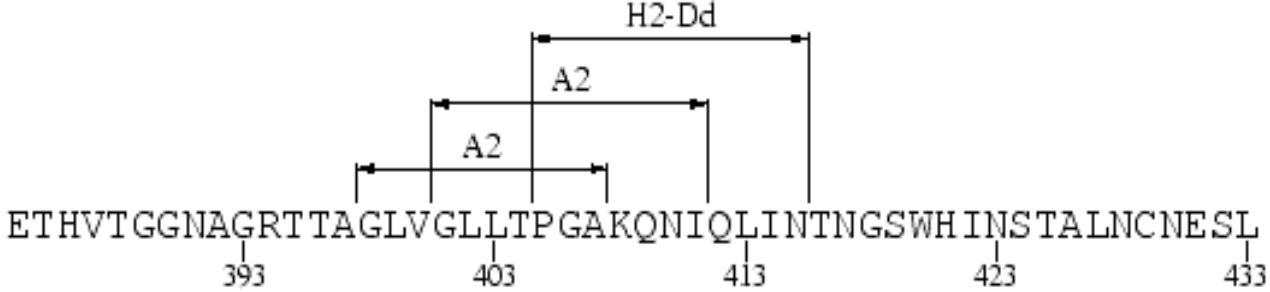
H2-Dd
A2
A2
ETHVTGGNAGRTTAGLVGLLTPGAKQNIQLINTNGSWHINSTALNCNESL
393
403
413
423
433

B53
B53
NTGWLAGLFYQHKFNSSGCPERLASCRRLTDFAQGWGPISYANGSGLDER
443
453
463
473
483

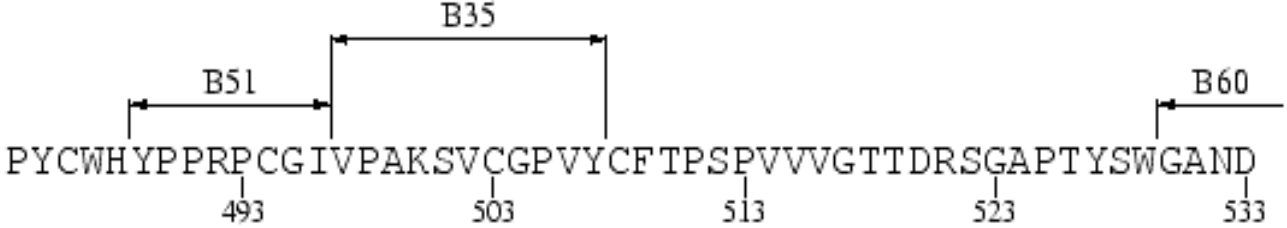
B35
B51
B60
PYCWHYPPRPCGIVPAKSVCGPVYCFTPSPVVVGTTDRSGAPTYSWGAND
493
503
513
523
533

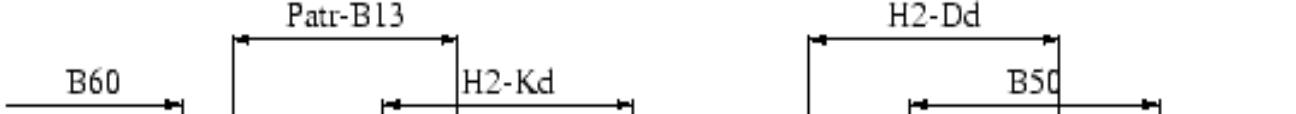
Patr-B13
H2-Dd
B60
H2-Kd
B50
TDVFVLNNTRPPLGNWFGCTWMNSTGFTKVCGAPPCVIGGVGNNTLLCPT
543
553
563
573
583

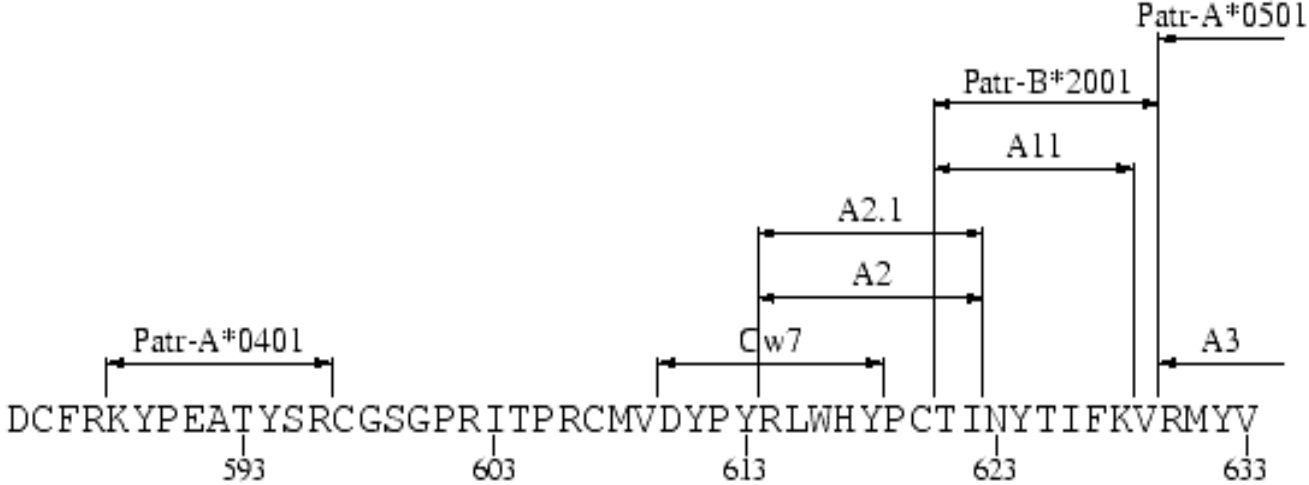
Patr-A*0501
Patr-B*2001
A11
A2.1
A2
Patr-A*0401
Cw7
A3
DCFRKYPEATYSRCGSGPRITPRCMVDYPYRLWHYPCTINYTIFKVRMYV
593
603
613
623
633

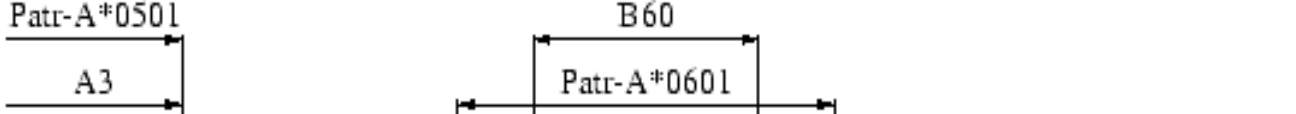
Patr-A*0501
B60
A3
Patr-A*0601
GGVEHRLEAACNWTRGERCDLEDRDRSELSPLLLSTTQWQVLPCSFTTLP
643
653
663
673
683

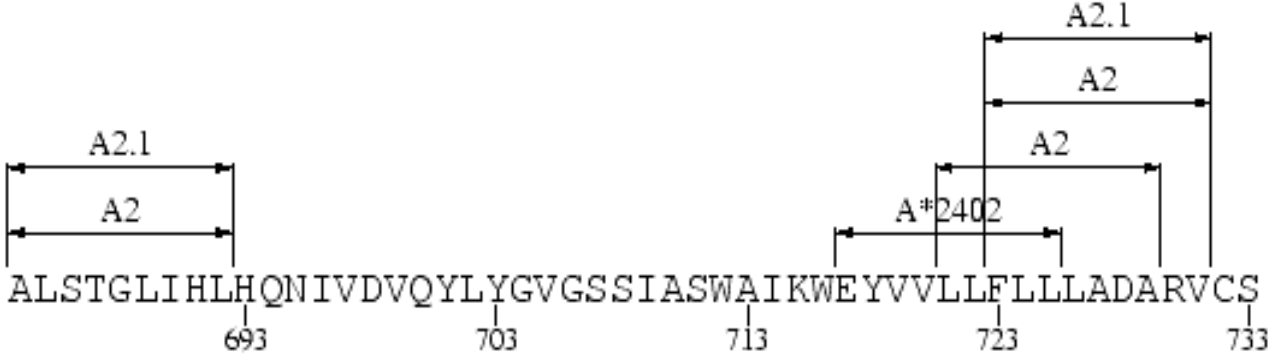
A2.1
A2
A2.1
A2
A2
A*2402
ALSTGLIHLHQNIVDVQYLYGVGSSIASWAIKWEYVVLLFLLLADARVCS
693
703
713
723
733

CLWMMLLISQAEA

743

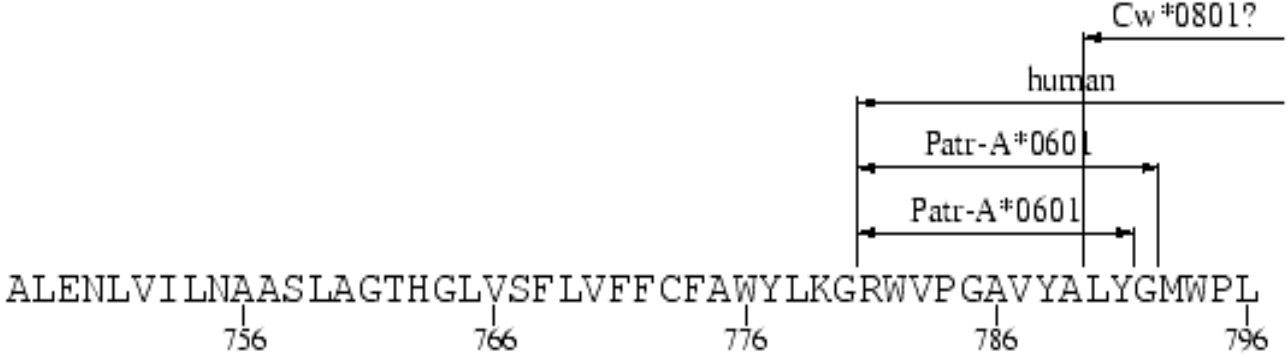
Cw*0801?
human
Patr-A*0601
Patr-A*0601
ALENLVILNAASLAGTHGLVSFLVFFCFAWYLKGRWVPGAVYALYGMWPL
756
766
776
786
796

Cw*0801?
human
LLLLLALPQRAYA
806

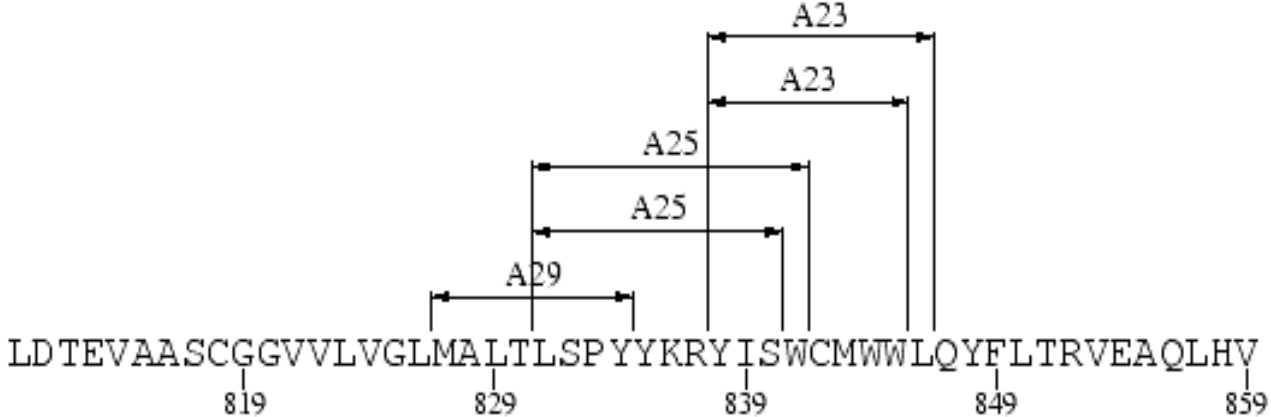
A23
A23
A25
A25
A29
LDTEVAASCGGVVLVGLMALTLSPYYKRYISWCMWWLQYFLTRVEAQLHV
819
829
839
849
859

WVPPLNVRGGRDAVILLTCVVHPALVFDITKLLLAIFGPLWILQASLLKV

869 879 889 899 909

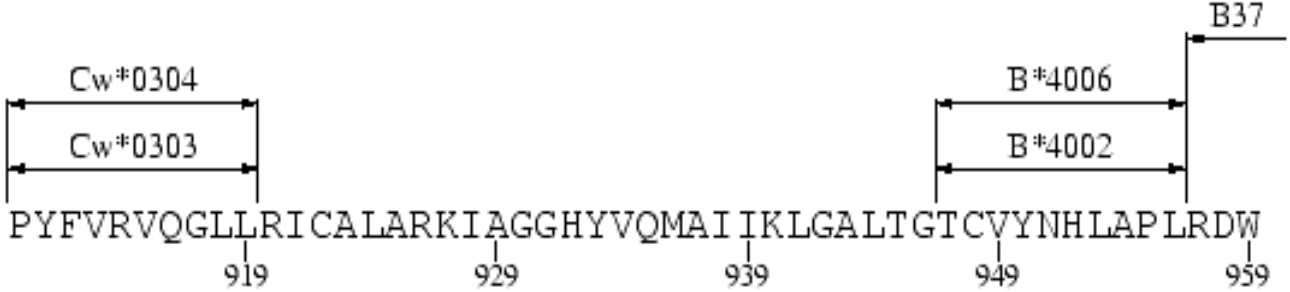
B37
Cw*0304
B*4006
Cw*0303
B*4002
PYFVRVQGLLRICALARKIAGGHYVQMAIIKLGALTGTCVYNHLAPLRDW
919
929
939
949
959

B37
Patr-A*0402
AHNGLRDLAVAVEPVVFSRMETKLITWGADTAACGDIINGLPVSARRGQE
969
979
989
999
1009

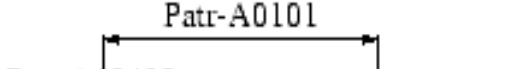
Patr-A0101
Patr-A*0402
ILLGPADGMVSKGWRLL
1019

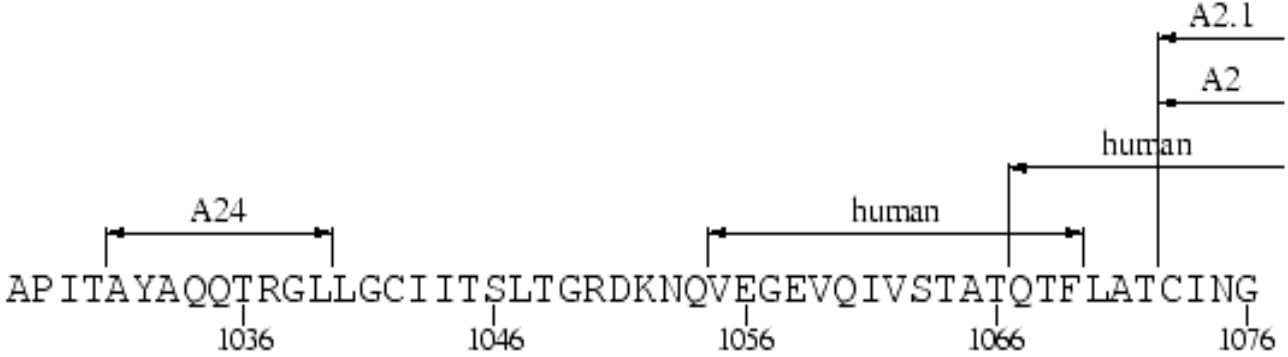
A2.1
A2
human
A24
human
APITAYAQQTRGLLGCIITSLTGRDKNQVEGEVQIVSTATQTFLATCING
1036
1046
1056
1066
1076

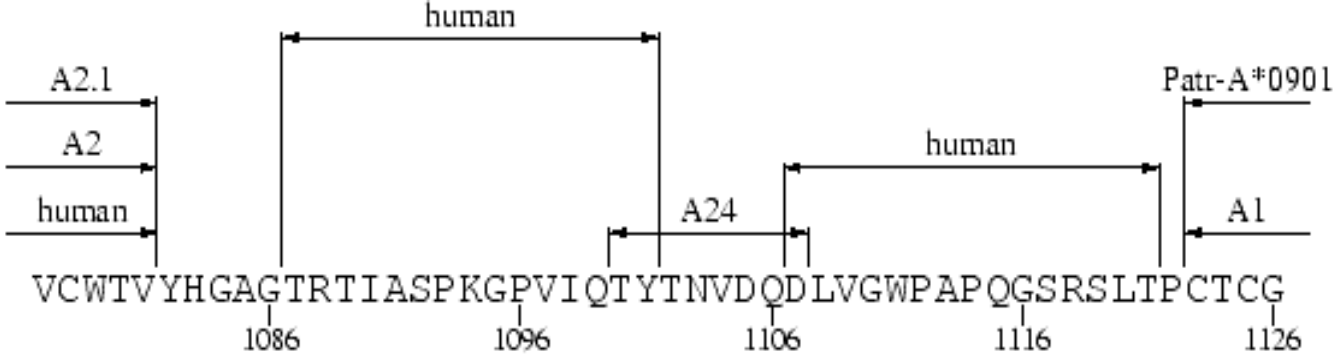
human
A2.1
A2
human
Patr-A*0901
human
A24
A1
VCWTVYHGAGTRTIASPKGPVIQTYTNVDQDLVGWPAPQGSRSLTPCTCG
1086
1096
1106
1116
1126

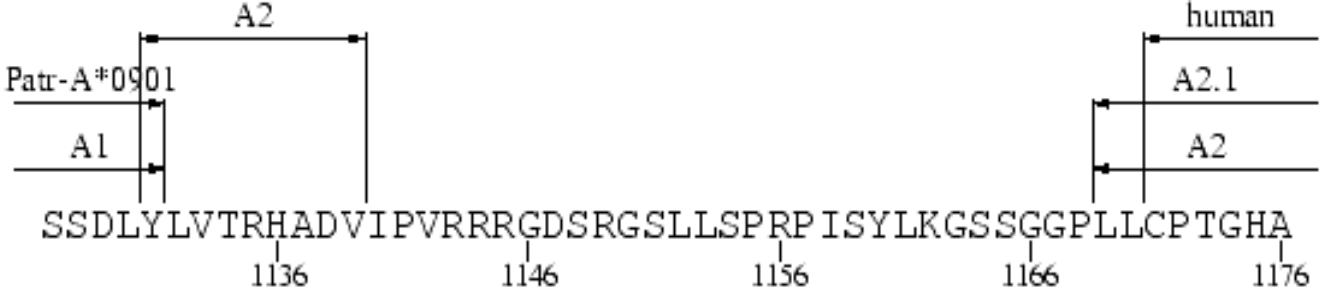
A2
human
Patr-A*0901
A2.1
A1
A2
SSDLYLVTRHADVIPVRRRGDSRGSLLSPRPISYLKGSSGGPLLCPTGHA
1136
1146
1156
1166
1176

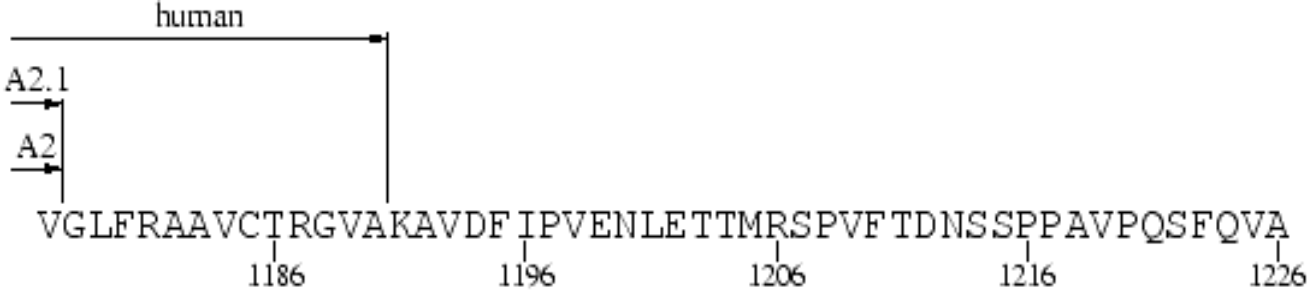
human
A2.1
A2
VGLFRAAVCTRGVAKAVDFIPVENLETTMRSPVFTDNSSPPAVPQSFQVA
1186
1196
1206
1216
1226

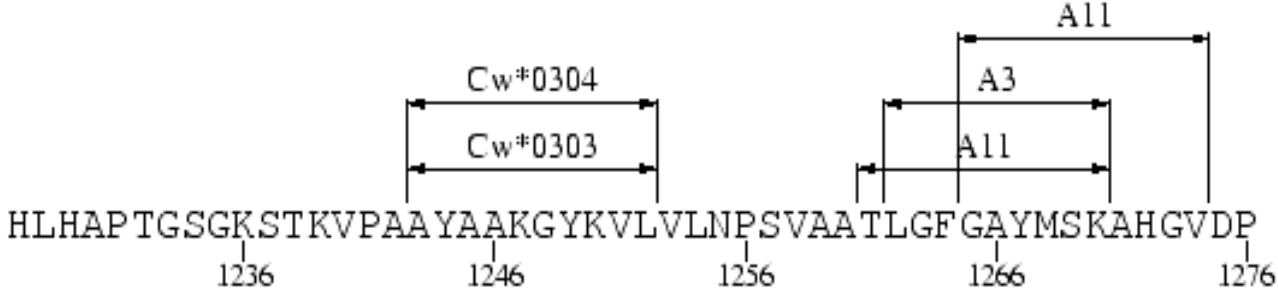
A11
Cw*0304
A3
Cw*0303
A11
HLHAPTGSGKSTKVPAAYAAKGYKVLVLNPSVAATLGFGAYMSKAHGVDP
1236
1246
1256
1266
1276

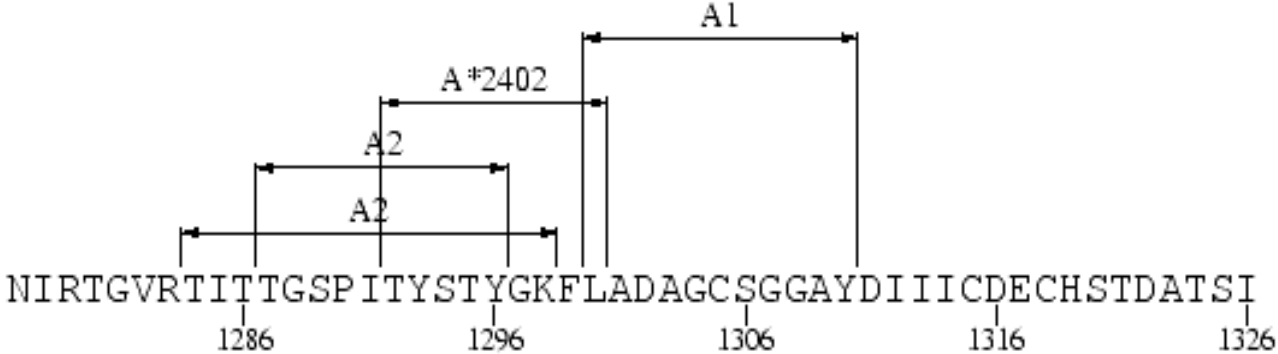
A1
A*2402
A2
A2
NIRTGVRTITTGSPITYSTYGKFLADAGCSGGAYDIIICDECHSTDATSI
1286
1296
1306
1316
1326

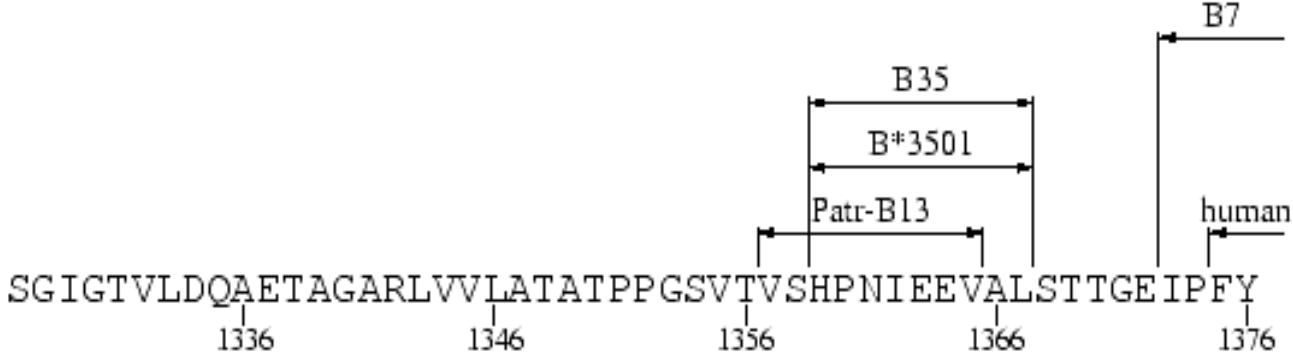
B7
B35
B*3501
Patr-B13
human
SGIGTVLDQAETAGARLVVLATATPPGSVTVSHPNIEEVALSTTGEIPFY
1336
1346
1356
1366
1376

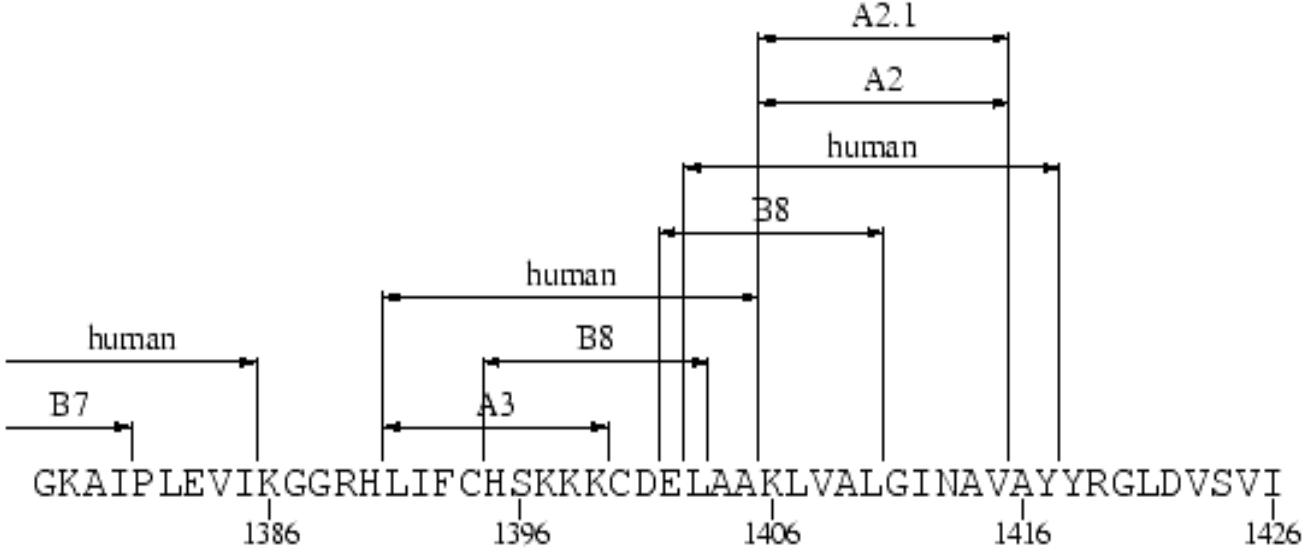
A2.1
A2
human
B8
human
B8
human
B7
A3
GKAIPLEVIKGGRHLIFCHSKKKCDELAAKLVALGINAVAYYRGLDVSVI
1386
1396
1406
1416
1426

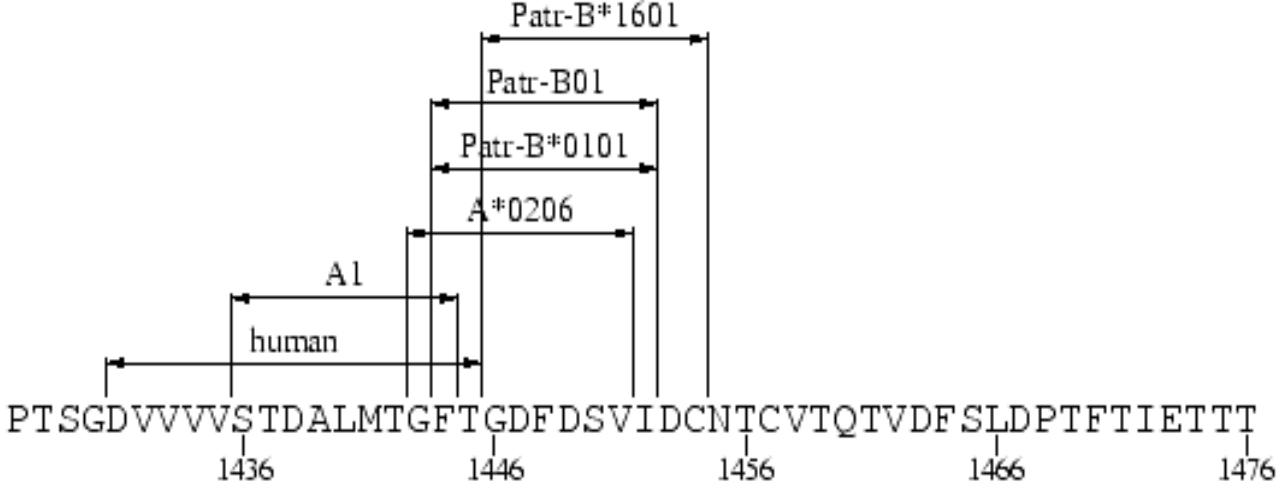
Patr-B*1601
Patr-B01
Patr-B*0101
A*0206
A1
human
PTSGDVVVVSTDALMTGFTGDFDSVIDCNTCVTQTVDFSLDPTFTIETTT
1436
1446
1456
1466
1476

LPQDAVSRTQRRGRTGRGKPGIYRFVAPGERPSGMFDSSVLCECYDAGCA

1486 1496 1506 1516 1526

B35

WYELTPAETTVRLRAYMNTPGLPVCQDHLGFWEGVFTGLTHIDAHFLSQT

1536 1546 1556 1566 1576

A2.1
A2
B8
KQSGENFPYLVAYQATVCARAQAPPPSWDQMRKCLIRLKPTLHGPTPLLY
1586
1596
1606
1616
1626

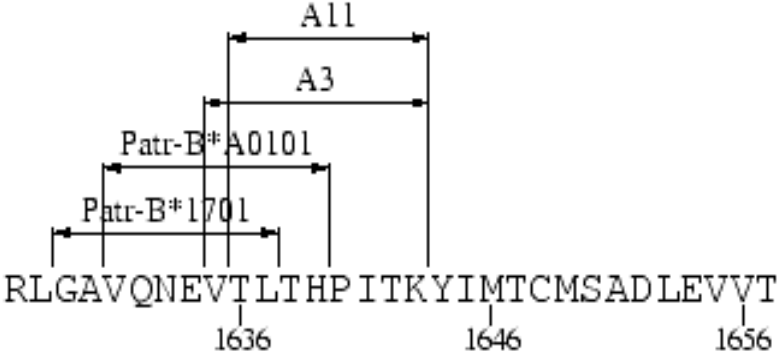
A11
A3
Patr-B*A0101
Patr-B*1701
RLGAVQNEVTLTHPITKYIMTCMSADLEVVT
1636
1646
1656

A2
A2
STWVLVGGVLAALAAYCLSTGCVVIVGRIVLSGKPAIIPDREVLYQEFDE
1667
1677
1687
1697
1707

MEEC

1711

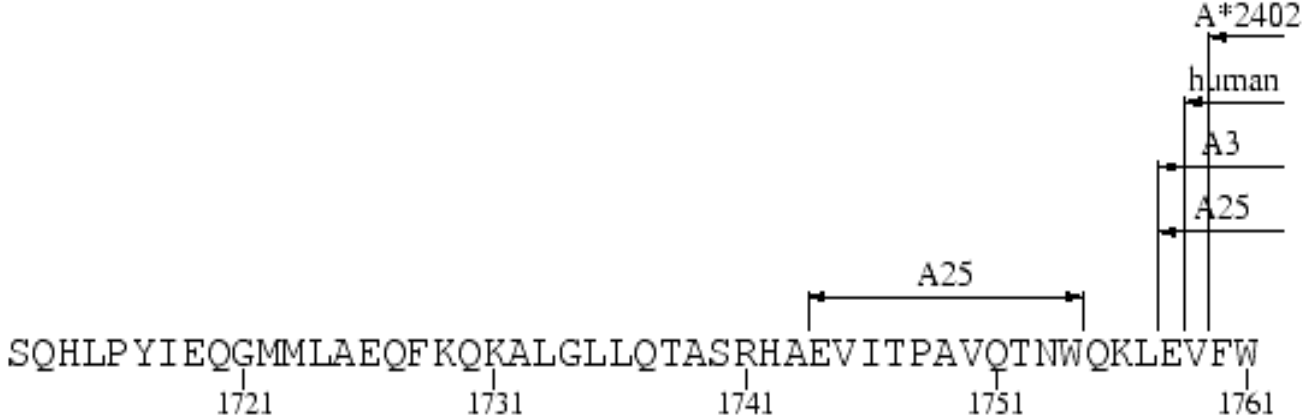
A*2402
human
A3
A25
A25
SQHLPYIEQGMMLAEQFKQKALGLLQTASRHAEVITPAVQTNWQKLEVFW
1721
1731
1741
1751
1761

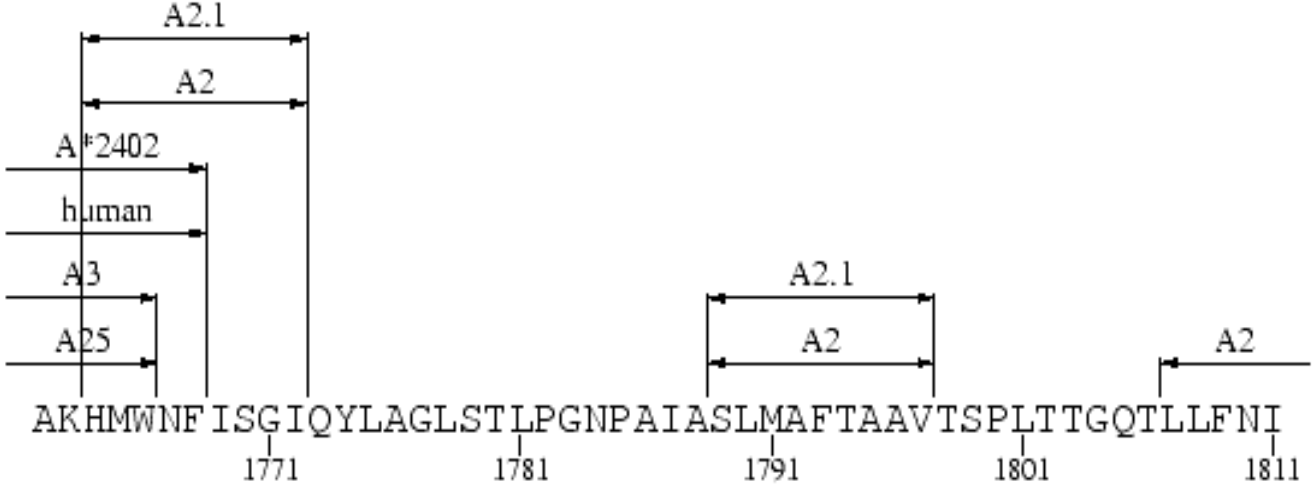
A2.1
A2
A*2402
human
A3
A25
A2.1
A2
A2
AKHMWNFISGIQYLAGLSTLPGNPAIASLMAFTAAVTSPLTTGQTLLFNI
1771
1781
1791
1801
1811

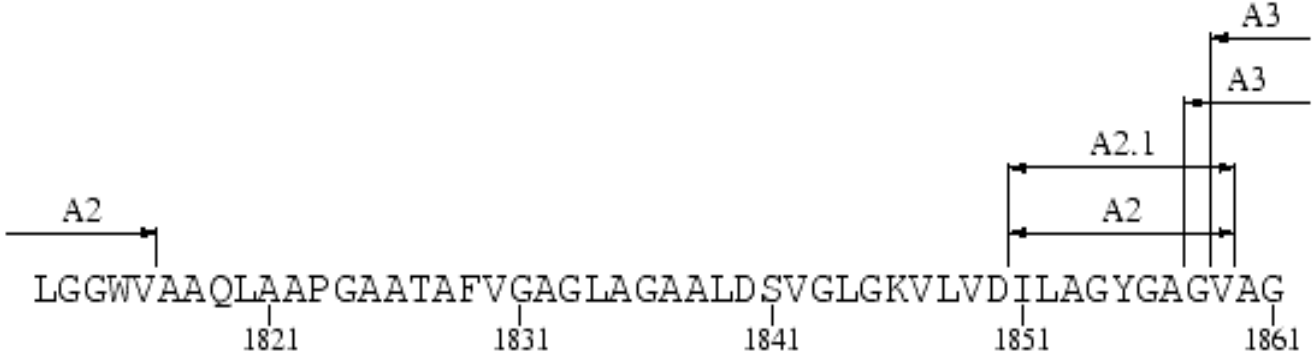
A3
A3
A2.1
A2
A2
LGGWVAAQLAAPGAATAFVGAGLAGAALDSVGLGKVLVDILAGYGAGVAG
1821
1831
1841
1851
1861

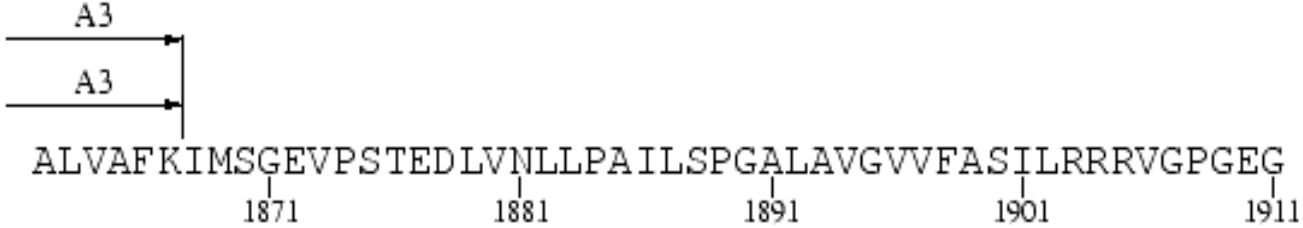
A3
A3
ALVAFKIMSGEVPSTEDLVNLLPAILSPGALAVGVVFASILRRRVGPGEG
1871
1881
1891
1901
1911

A2 B38

AVQWMNRLIAFASRGNHVSPTHYVPESDAAARVTAILSSLTVTQLLRRLH

1921 1931 1941 1951 1961

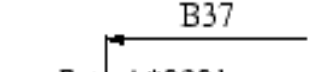
B37
Patr-A*0901
QWISSECTTPC
1971

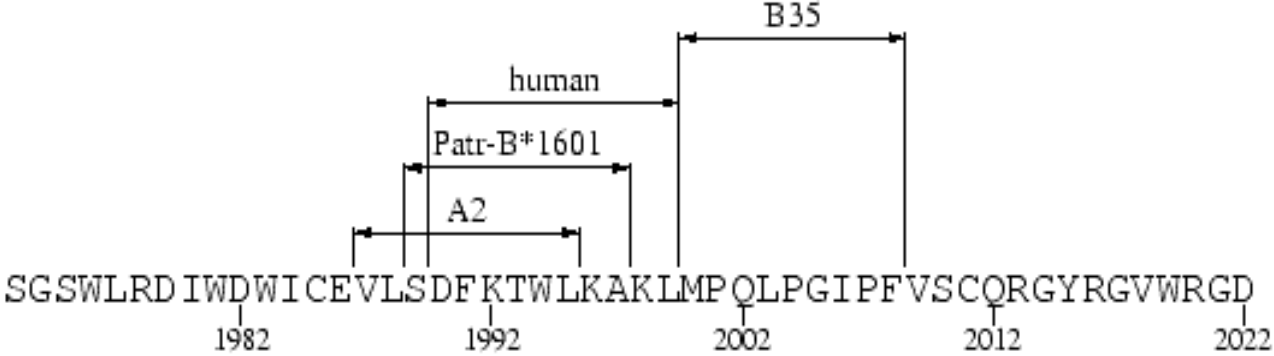
B35
human
Patr-B*1601
A2
SGSWLRDIWDWICEVLSDFKTWLKAKLMPQLPGIPFVSCQRGYRGVWRGD
1982
1992
2002
2012
2022

Patr-A*0601
Patr-A*06
GIMHTRCHCGAEITGHVKNGTMRIVGPRTCKNMWSGTFFINAYTTGPCTP
2032
2042
2052
2062
2072

LPAPNYKFALWRVSAEEYVEIRRVGDFHYVSGMTTDNLKCPCQIPSPEFF

2082 2092 2102 2112 2122

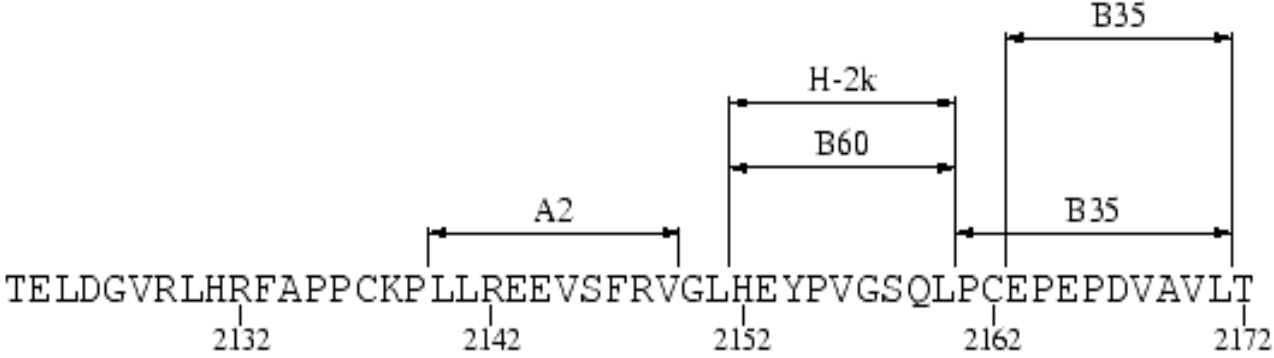
B35
H-2k
B60
A2
B35
TELDGVRLHRFAPPCKPLLREEVSFRVGLHEYPVGSQLPCEPEPDVAVLT
2132
2142
2152
2162
2172

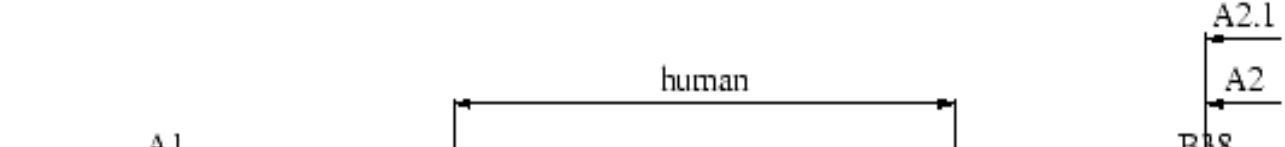
A2.1
A2
human
A1
B38
SMLTDPSHITAEAAGRRLARGSPPSMASSSASQLSAPSLKATCTANHDSP
2182
2192
2202
2212
2222

A25
B60
A2.1
Patr-B*0401
A2
A2.1
B38
A2
DAELIEANLLWRQEMGGNITRVESENKVVILDSFDPLVAEEDEREVSVPA
2232
2242
2252
2262
2272

A*2402
B60
EILRKSRRFAPALPVWARPDYNPLLVETWKKPDYEPPVVHGCPLPPPRSP
2282
2292
2302
2312
2322

PVPPPRKKRTVVLTESTLPTALAELATKSFGSSSTSGITGDNTTTSSEPA

2332 2342 2352 2362 2372

PSGCPPDSDVESYSSMPPLEGEPGDPDLSDGSWSTVSSGADTEDVVCC

2382 2392 2402 2412

mouse
human
SMSYSWTGALVTPCAAEEQKLPINALSNSLLRHHNLVYSTTSRSACQRKK
2430
2440
2450
2460
2470

A3
Patr-A*0301
KVTFDRLQVLDSHYQDVLKEVKAAASKVKANLLSVEEACSLAPPHSAKSK
2480
2490
2500
2510
2520

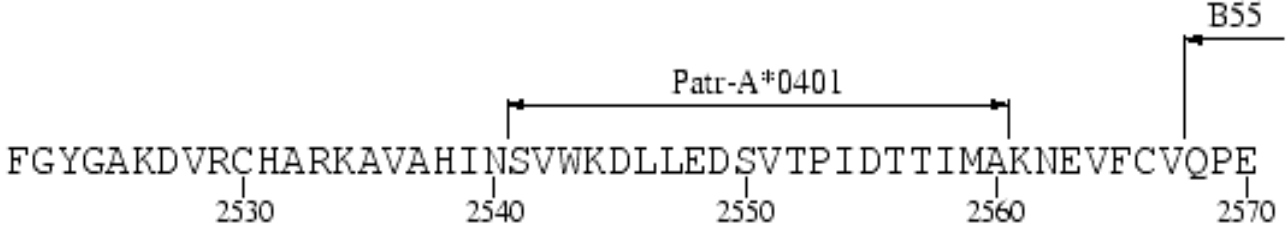
B55
Patr-A*0401
FGYGAKDVRCHARKAVAHINSVWKDLLEDSVTPIDTTIMAKNEVFCVQPE
2530
2540
2550
2560
2570

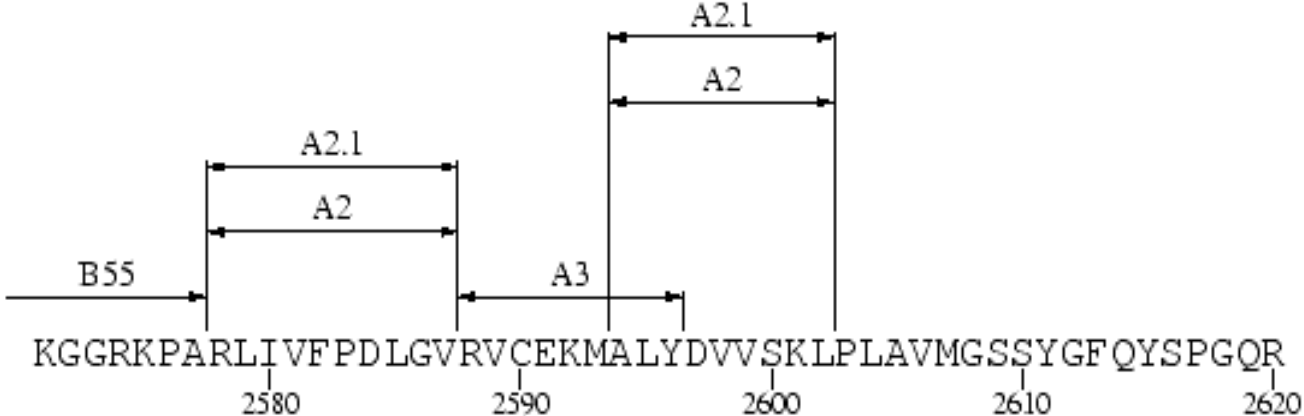
A2.1
A2
A2.1
A2
B55
A3
KGGRKPARLIVFPDLGVRVCEKMALYDVVSKLPLAVMGSSYGFQYSPGQR
2580
2590
2600
2610
2620

B57
Patr-B*2401
VEFLVQAWKSKKTPMGLSYDTRCFDSTVTESDIRTEEAIYQCCDLDPQAR
2630
2640
2650
2660
2670

Patr-B*2401

VAIKSLTERLYVGGPLTNSRGENCGYRRCRASRVLTTSCGNTLTRYIKAR

2680 2690 2700 2710 2720

A2.1
A2
AACRAAGLQDCTMLVCGDDLVVICESAGVQEDAASLRAFTEAMTRYSAPP
2730
2740
2750
2760
2770

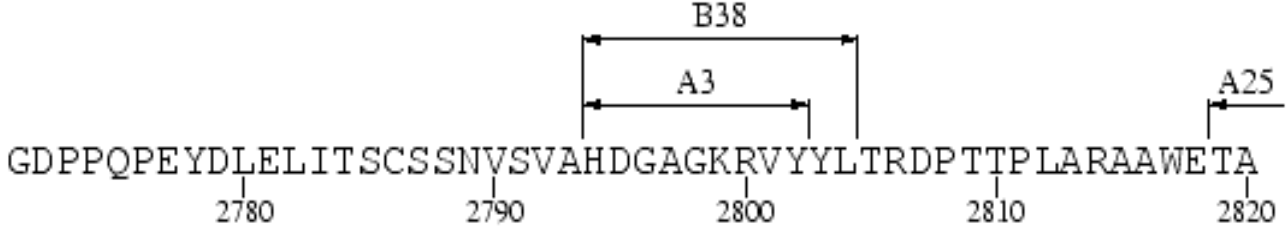
B38
A3
A25
GDPPQPEYDLELITSCSSNVSVAHDGAGKRVYYLTRDPTTPLARAAWETA
2780
2790
2800
2810
2820

A25 A*2402

RHTPVNSWLGNIIMFAPTLWARMILMTHFFSVLIARDQLEQALNCEIYGA

2830 2840 2850 2860 2870

B55
A*2402
A1
CYSIEPLDLPPIIQRLHGLSAFSLHSYSPGEINRVAACLRKLGVPPLRAW
2880
2890
2900
2910
2920

RHRAWSVRARLLARGGKAAICGKYLFNWAVRTKLKLTPITAAGRLDLSGW

2930 2940 2950 2960 2970

A31

FTAGYSGGDIYHSVSHARPRWFWFCLLLLAAGVGIYLLPNR

2980 2990 3000 3010